Per Unit System

❖In the power systems analysis field of electrical engineering, a **per-unit system** is the expression of system quantities as fractions of a defined base unit quantity. In a large interconnected power system with various voltage levels and various capacity equipments, it has been found quite convenient to work with per unit (p.u) system of quantities for analysis purpose rather than in absolute values of quantities.

❖The per unit quantity is defined as:

$$\text{Per unit quantity} = \frac{\text{Actual value of the quantity}}{\text{Base value of that quantity}}$$

❖To completely define a per unit system, minimum four base quantities are required. Let us define:

$$Voltage(V)_{p.u} = \frac{Actual\ Voltage}{Base\ Voltage(V_B)};$$

$$Current(I)_{p.u} = \frac{Actual\ Curent}{Base\ Current(I_B)};$$

$$impedance(Z)_{p.u} = \frac{Actual\ impedance}{Base\ impedance(Z_B)};$$

$$Apparent\ Power\ (S)_{p.u} = \frac{Actual\ Apparent\ Power}{Base\ Apparent\ Power\ (S_B)};$$

Base Quantities

❖The selection of base quantities is also very important. Some of base quantities are chosen independently and arbitrarily while others automatically follow depending upon the fundamental relationships between system variables.

❖**The rating of the equipments in a power system are given in terms of operating voltage and the capacity in *kVA*. Hence, universal practice is to use machine rating power (*kVA*) and voltage as base quantities** and the base values of current and impedance are calculated from both of them.

❖In electrical engineering, the three basic quantities are voltage, current and impedance. If we choose any two of them as the base or reference quantity, the third one automatically will have a base or reference value depending upon the other two. E.g. if *V* and *I* are the base voltage and current in a system, the base impedance of the system is fixed and is given by:

$$Base\,impedance(Z_B) = \frac{Base\,Voltage(V_B)}{Base\,Current(I_B)}$$

Base Quantities

$$I_{base} = \frac{S_{base}}{V_{base}}$$

$$Z_{base} = \frac{V_{base}}{I_{base}} = \frac{V_{base}^2}{S_{base}}$$

$$Z_{p.u} = \frac{Z_A}{Z_B} = \frac{Z_A}{\frac{V_B}{I_B}} = \frac{Z_A \times I_B}{V_B} = \frac{Z_A \times S_B}{V_B \times V_B} = \frac{Z_A \times S_B}{V^2{}_B}$$

❖This means that the per unit impedance is directly proportional to the base kVA and inversely proportional to the square of base voltage.

❖When all the quantities are converted in per unit values, the different voltage levels disappear and power network involving synchronous generators, transformers and line reduces to a system of simple impedances.

Base Quantities

❖When the problems to be solved are more complex, and particularly when transformers are involved, the advantages of calculations in per unit are more apparent.

❖A well chosen per unit system can reduce the computational effort, simplify evaluation and facilitate the understanding of system characteristics.

Importance of Per Unit System

❖For an engineer, it is quite easy to remember the per unit values for all quantities rather than to remember actual values of all quantities.

❖Look at the Table and realize per unit system is easy to remember or actual value system.

Actual Voltage	V at 0.9 p.u	V at 0.95 p.u	V at 1.0 p.u	V at 1.05 p.u	V at 1.1 p.u
220	198V	209V	220V	231V	242V
440	396V	418V	440V	462V	484V
11kv	9.9kV	10.45kV	11kV	11.55kV	12.1 kV
33kv	29.7kV	31.35 kV	33kV	34.65kV	36.3kV
66kv	59.4kV	62.7kV	66kV	69.3kV	72.6kV
132kv	118.8kV	125.4kV	132kV	138.6kV	145.2kV
220kv	198kV	209kV	220kV	231kV	242kV
500kv	450kV	475kV	500kV	525kV	550kV

Importance of Per Unit System

❖It can be observed that only for voltage at different levels, it is quite difficult to remember all these limits. However, on the other hand, per unit is easy to remember. Now, imagine the level of difficulty if an engineer has to remember values for current, power too.

❖Furthermore, it is quite difficult to find the error in the actual values as compared to per unit system. For example, if voltage crosses 0.9 limit, it can be easily understood that voltage has crossed its safe limit, but in actual voltage values, it is difficult to know whether voltage has crossed the safe limit.

❖The per unit representation of the impedance of an equipment is more meaningful than its absolute value.

Effect of 1-ϕ and 3-ϕ on Per Unit System

❖The per unit system has the advantage that it equations remains same for single phase as well as three phase system. E.g. in single phase, we have the formula for Z_{base} as:

$$Z_{base} = \frac{V_{base}}{I_{base}} = \frac{V_{base}^2}{S_{base}}$$

❖Now, for three phase, voltage and current are given by:

$$V_B = \frac{V_B}{\sqrt{3}} \qquad I_B = \frac{S_B}{\sqrt{3}V_B}$$

Now, the formula for Z_{base} will become:

$$Z_B = \frac{V_B}{I_B} = \frac{\frac{V_B}{\sqrt{3}}}{\frac{S_B}{V_B \times \sqrt{3}}} = \frac{V_B}{\sqrt{3}} \times \frac{V_B \times \sqrt{3}}{S_B} = \frac{V^2{}_B}{S_B} = \frac{V^2{}_{Base}}{S_{Base}}$$

❖Hence, it can be seen that per unit system has no effect of single phase and three phase system.

Advantages of Per unit System

❖The per-unit system was originally developed to simplify laborious hand calculations and while it is now not always necessary (due to the widespread use of computers), the per-unit system does still offer some distinct advantages over standard SI values:

❖The per unit values of impedance, voltage, and current of a transformer are the same regardless of whether they are referred to the primary or the secondary side. This is a great advantage since the different voltage levels disappear and the entire system reduces to a system of simple impedance. This can be a pronounced advantage in power system analysis where large numbers of transformers may be encountered.

❖Moreover, similar types of apparatus will have the impedances lying within a narrow numerical range when expressed as a per-unit fraction of the equipment rating, even if the unit size varies widely.

❖Similar apparatus (generators, transformers, lines) will have similar per-unit impedances and losses expressed on their own rating, regardless of their absolute size. Because of this, per-unit data can be checked rapidly for gross errors. A per unit value out of normal range is worth looking into for potential errors.

Advantages of Per unit System

❖Manufacturers usually specify the impedance of apparatus in per unit values.

❖By normalizing quantities to a common base, both hand and automatic calculations are simplified. It improves numerical stability of automatic calculation methods.

❖The per unit value of the resistance of a machine furnishes almost at a glance its electrical losses in the percent of its rated power. For example, a transformer operating under rated conditions at **unity power factor** with a winding resistance of 0.01 per unit has a copper loss of 1%.

$$I^2R = (1.0)^2 \times 0.01 = 0.01 p.u = 0.01 \times 100 = 1\%$$

❖This information is very useful to a power system engineer because he can estimate and locate the quantity of the various copper losses simply by looking at the one line per unit impedance diagram.

❖Per unit parameters simplify the simulation of simple or complex power system problems on computers. Such simulations are important for transient and steady state analyses.

Advantages of Per unit System

❖The per unit system simplifies the analysis of problems that include star delta types of winding connections. The factor of $\sqrt{3}$ is not used for the per unit analysis. For example, consider the expression for the power:

$$P = VI\cos\theta$$

When the voltage and the current are expressed in per unit, this relationship gives the total power in per unit, regardless of a delta or star winding connection.

❖The per unit values of the impedance of a single or simple multi-component power system readily provide the short circuit current at different points on the network. For example a transformer with a per unit impedance of 5% would result (without taking into consideration the motor's short circuit current contribution) in a short circuit current of I_{SC} of:

$$I_{SC} = \frac{V_{p.u}}{Z_{p.u}} = \frac{1}{0.05} = 20p.u$$

Advantages of Per unit System

❖Per-unit impedance values of equipment are normally found over a small range of values irrespective of the absolute size. On the other hand, ohmic values may have significant variation and are often proportional to nominal rating.

❖The ohmic value of impedances as referred to secondary is different from the value as referred to primary. However, if base values are selected properly, the p.u. impedance is the same on the two sides of the transformers. i.e., Star or Delta.

Changing the Base of Per unit Quantities

❖Some times the per unit impedance of a component of a system is expressed on a base other than the one selected as base for the part of the system in which the component is located.

❖Since all impedances in any part of a system must be expressed on the same impedance base when making computations, it is necessary to have a means of converting per unit impedances from one base to another.

❖We know that $Z_{p.u} = \dfrac{Z_A \times S_B}{V^2{}_B}$

$$\frac{Z_{(p.u)new}}{Z_{(p.u)old}} = \frac{Z_{act} \times \dfrac{S_{(Base)new}}{V^2{}_{(Base)new}}}{Z_{act} \times \dfrac{S_{(Base)old}}{V^2{}_{(Base)old}}} = Z_{act} \times \frac{S_{(Base)new}}{V^2{}_{(Base)new}} \times \frac{V^2{}_{(Base)old}}{Z_{act} \times S_{(Base)old}}$$

$$\frac{Z_{(p.u)new}}{Z_{(p.u)old}} = \frac{V^2{}_{(Base)old}}{V^2{}_{(Base)new}} \times \frac{S_{(Base)new}}{S_{(Base)old}} = \left[\frac{V_{(Base)old}}{V_{(Base)new}}\right]^2 \times \frac{S_{(Base)new}}{S_{(Base)old}}$$

Changing the Base of Per unit Quantities

$$Z_{(p.u)new} = Z_{(p.u)old} \times \left[\frac{V_{(Base)old}}{V_{(Base)new}}\right]^2 \times \frac{S_{(Base)new}}{S_{(Base)old}}$$

$$\boxed{Z_{(p.u)new} = Z_{(p.u)old} \times \left[\frac{base\,kV_{given}}{base\,kV_{new}}\right]^2 \times \frac{base\,kVA_{new}}{base\,kVA_{given}}}$$

❖If the old base voltage and new base voltage are the same, then formula becomes:

$$\boxed{Z_{(p.u)new} = Z_{(p.u)old} \times \frac{base\,kVA_{new}}{base\,kVA_{given}}}$$

❖Example:

This example is taken from the book Power System analysis by Stevenson, Chapter one, Example 1.5.

❖ The reactance of a generator designated X'' is given as 0.25 per unit based on the generator's nameplate rating of 18 kV, 500 MVA. The base for calculations is 20 kV, and 100 MVA. Find X'' on the new base.

❖Data:

❖ $X''_{given} = 0.25$ p.u, Base $kV_{\text{given}} = 18\ kV$,

❖Base $kVA_{given} = 500\ MVA$, Base $kV_{\text{New}} = 20\ kV$,

❖Base $kVA_{New} = 100\ MVA$, $X''_{new} = ?$

❖Solution:

❖ we know that the formula for finding the new impedance is given as below:

$$Z_{(p.u)new} = Z_{(p.u)old} \times \left[\frac{base\,kV_{given}}{base\,kV_{new}}\right]^2 \times \frac{base\,kVA_{new}}{base\,kVA_{given}}$$

❖The above formula for X'' can be modified as below:

❖Example:

$$X''(p.u)_{new} = X''_{(p.u)old} \times \left[\frac{base\,kV_{given}}{base\,kV_{new}}\right]^2 \times \frac{base\,kVA_{new}}{base\,kVA_{given}}$$

❖By putting the values in above equation we get:

$$X''(p.u)_{new} = 0.25 \times \left[\frac{18 \times 1000}{20 \times 1000}\right]^2 \times \frac{100 \times 10^6}{500 \times 10^6} = 0.25 \times \left[\frac{18}{20}\right]^2 \times \frac{1}{5}$$

$$X''(p.u)_{new} = 0.25 \times \frac{324}{400} \times \frac{1}{5} = 0.25 \times 0.81 \times 0.2$$

$$\boxed{X''(p.u)_{new} = 0.0405\ p.u}$$

Answer

❖Example:

❖ A single phase 20 kVA, 480/120V, 60 Hz single phase transformer has an impedance of Z_{eq2} = 0.0525<78.13 degrees ohms referred to the LV winding. Determine the per unit transformer impedance referred to the LV winding and the HV winding.

❖Solution:

The equation of Z_{eq1} is taken from transformer primary and secondary number of turns equation derivation.

❖ The transformer impedance referred to the HV winding is given by:

$$Z_{eq1} = a^2 \times Z_{eq2}; \quad OR \quad Z_{primary} = a^2 \times Z_{secondary}$$

$$Z_{eq1} = \left[\frac{480}{120}\right]^2 \times (0.0525\angle 78.13°) = \left[\frac{48}{12}\right]^2 \times (0.0525\angle 78.13°)$$

$$Z_{eq1} = (4)^2 \times (0.0525\angle 78.13°) = (16) \times (0.0525\angle 78.13°)$$

$$Z_{eq1} = Z_{primary} = 0.84\angle 78.13°$$

❖Example:

According to our convention, the base values for this system are:

$$S_{base} = 20 \text{ kVA},\ V_{base1} = V_{base\ Primary} = 480\text{V},\ V_{base2} = V_{base\ Secondary} = 120\text{V}$$

Now, the resulting base impedance for primary and secondary are:

$$Z_{base\_primary} = \frac{V^2{}_{base\_primary}}{S_{base}} = \frac{480^2}{20\times1000} = \frac{230400}{20000} = \frac{2304}{200} = 11.52\,\Omega$$

$$Z_{base\_secondary} = \frac{V^2{}_{base\_secondary}}{S_{base}} = \frac{120^2}{20\times1000} = \frac{14400}{20000} = \frac{144}{200} = 0.72\,\Omega$$

❖ Now, the resulting per unit impedance at primary and secondary side of the transformer are:

❖Example:

$$Z_{p.u\_primary} = \frac{Z_{Actual\_primary}}{Z_{base\_primary}} = \frac{0.84\angle 78.13^\circ}{11.52} = 0.0729\angle 78.13^\circ \; p.u$$

$$Z_{p.u\_secondary} = \frac{Z_{Actual\_secondary}}{Z_{base\_secondary}} = \frac{0.0525\angle 78.13^\circ}{0.72} = 0.0729\angle 78.13^\circ \; p.u$$

❖Hence, it can be observed that the per unit impedance are equal for both sides of the transformer.

❖However, their actual values are different.

Answer

❖Example:

❖Draw an impedance diagram for the system shown in Figure, expressing all values as per unit values. Choose common base kVA as 50 kVA, and base voltage 2500 V.

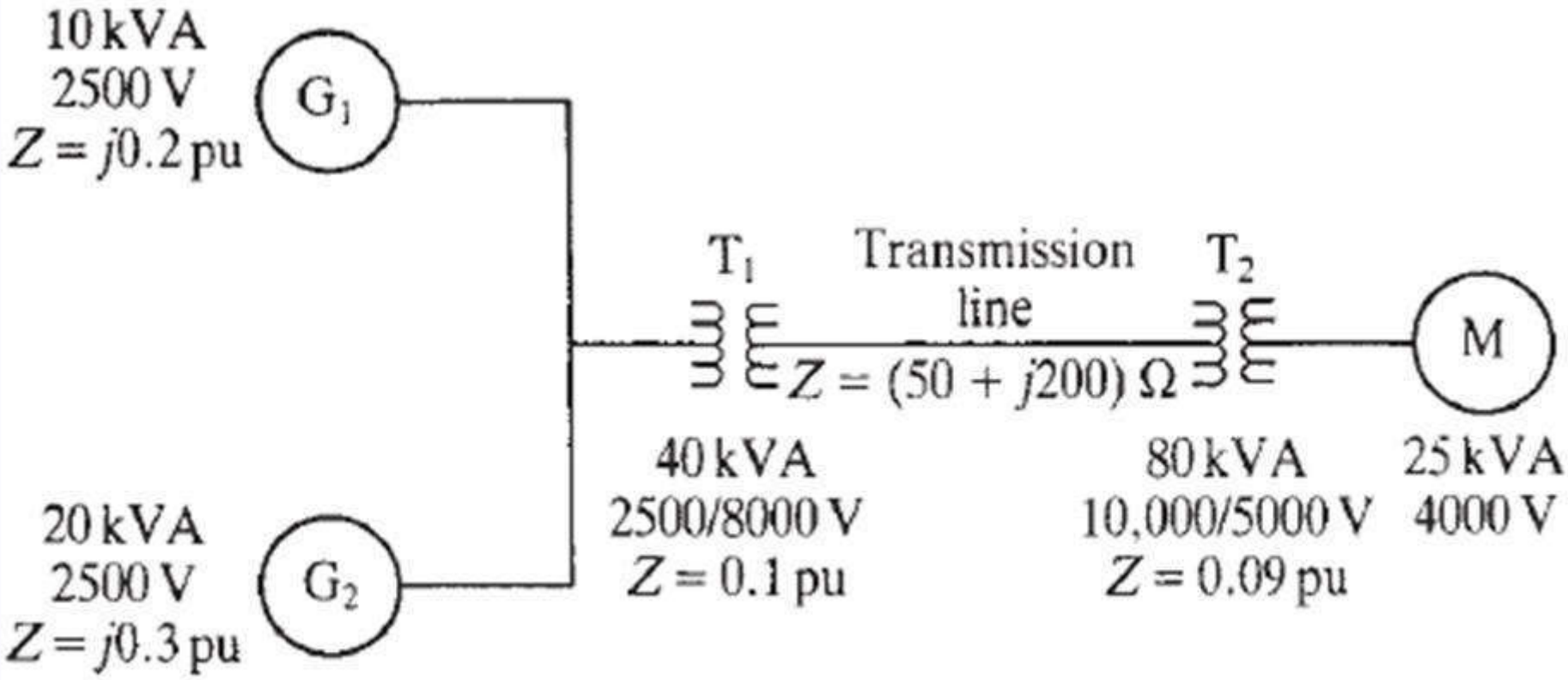

❖Example:

❖**Note:** The selected/chosen common base kVA and base kV are always termed as new base kVA and new base kV, whereas, the base kVA and base kV of the equipment are always termed as old base kVA and base kV.

❖Solution:

❖We know that the formula for new per unit impedance is given by:

$$Z_{(p.u)new} = Z_{(p.u)old} \times \left[\frac{base\,kV_{given}}{base\,kV_{new}}\right]^2 \times \frac{base\,kVA_{new}}{base\,kVA_{given}}$$

❖New Per unit Impedance of Generator G_1:

$$Z_{G_1(p.u)new} = j0.2 \times \left[\frac{2500}{2500}\right]^2 \times \frac{50 \times 1000}{10 \times 1000} = j0.2 \times 1 \times \frac{50}{10} = j0.2 \times 1 \times 5 = j1.0\ p.u$$

❖New Per unit Impedance of Generator G_2:

$$Z_{G_2(p.u)new} = j0.3 \times \left[\frac{2500}{2500}\right]^2 \times \frac{50 \times 1000}{20 \times 1000} = j0.3 \times 1 \times \frac{5}{2} = \frac{j1.5}{2} = j0.75\ p.u$$

❖Example:

❖New Per unit Impedance of Transformer T_1:

$$Z_{T_1(p.u)_{new}} = j0.1\times\left[\frac{2500}{2500}\right]^2\times\frac{50\times1000}{40\times1000} = j0.1\times1\times\frac{5}{4} = \frac{j0.5}{4} = j0.125\ p.u$$

❖New Per unit Impedance of Transmission Line:

❖It can be observed that for transmission line the base voltage is changed. Hence, first new base voltage is required to determined. Then its per unit impedance can be calculated. The formula for finding new base voltage is given by:

$$New\ Base\ Voltage = Old\ Base\ Voltage\times\frac{E_2}{E_1}$$

$$New\ Base\ Voltage = 2500\times\frac{8000}{2500} = 8{,}000\,V$$

❖Now, it can be noticed that the impedance of transmission line is given in ohms instead of per unit values. Hence, the formula to find per unit impedance of transmission line is given by:

❖Example:

$$Z_{p.u} = Z_{ohms} \times \frac{S_B}{V^2{}_B} = Z_{ohms} \times \frac{Base\,kVA}{(Base\,kV)^2}$$

$$Z_{Line(p.u)} = (50 + j200) \times \frac{50 \times 1000}{(8000)^2} = (50 + j200) \times \frac{50 \times 1000}{64{,}000{,}000} = (50 + j200) \times \frac{5}{64{,}00}$$

$$Z_{Line(p.u)} = \frac{(250 + j1000)}{64{,}00} = (0.039 + j0.156)\ p.u$$

❖New Per unit Impedance of Transformer T_2:

$$Z_{T_2(p.u)_{new}} = j0.09 \times \left[\frac{10{,}000}{8{,}000}\right]^2 \times \frac{50 \times 1000}{80 \times 1000} = j0.09 \times \left[\frac{10}{8}\right]^2 \times \frac{5}{8} = j0.09 \times \left[\frac{5}{4}\right]^2 \times \frac{5}{8}$$

$$Z_{T_2(p.u)_{new}} = j0.09 \times [1.25]^2 \times 0.625 = j0.09 \times 1.5625 \times 0.625 = j0.088\ p.u$$

❖New Per unit Impedance of Load:

❖It can be observed that for load, due to transformer, the base voltage is again changed. Hence, first new base voltage is required to determined. By using the formula for finding new base voltage we get:

❖Example:

$$New\ Base\ Voltage = 8{,}000 \times \frac{5{,}000}{10{,}000} = 8{,}000 \times \frac{5}{10} = 8{,}000 \times \frac{1}{2} = 4{,}000\,V$$

❖Now, it can be noticed that in data, rated kVA of motor is given instead of its impedance. Hence, we require only to calculate the per unit kVA which is given by:

$$Apparent\ Power\ (S)_{p.u} = \frac{Actual\ Apparent\ Power}{Base\ Apparent\ Power\ (S_B)} = \frac{25 \times 1000}{50 \times 1000} = 0.5\ p.u$$

❖Based upon these per unit values, the given one line diagram can be converted into its equivalent impedance diagram as below:

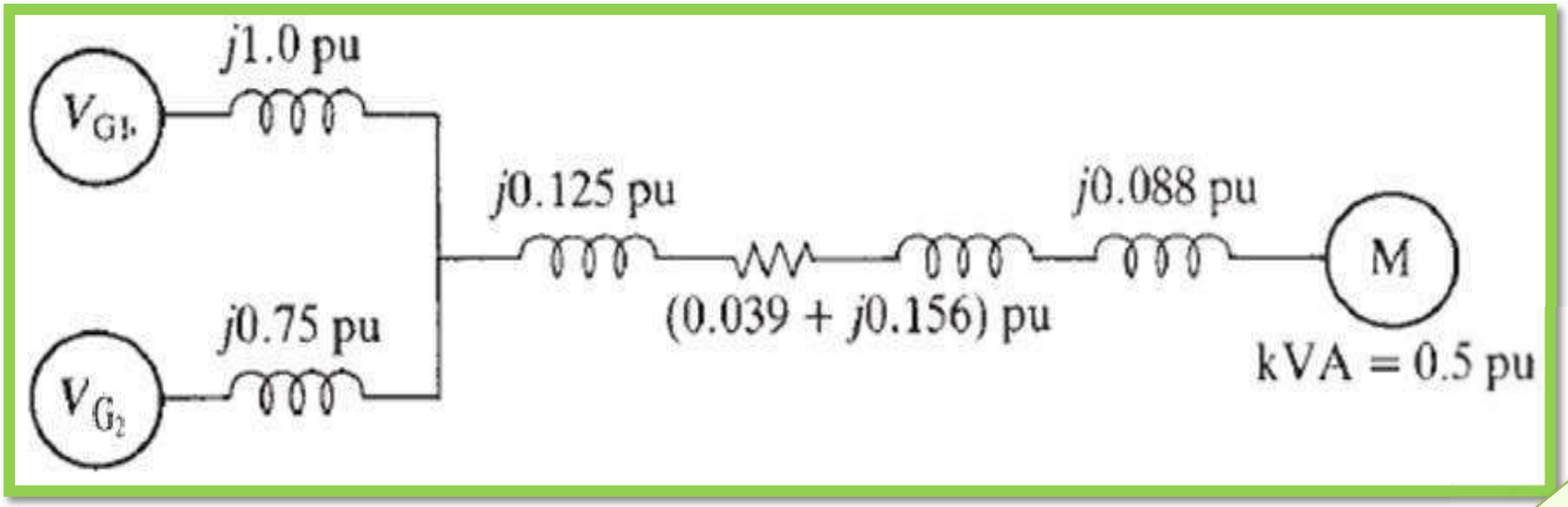

Answer

❖Example For Practice:

❖A simple power system is shown in Fig. Redraw this system when the per unit impedance of the components are represented on the common base 0f 5000 VA and 250 V.

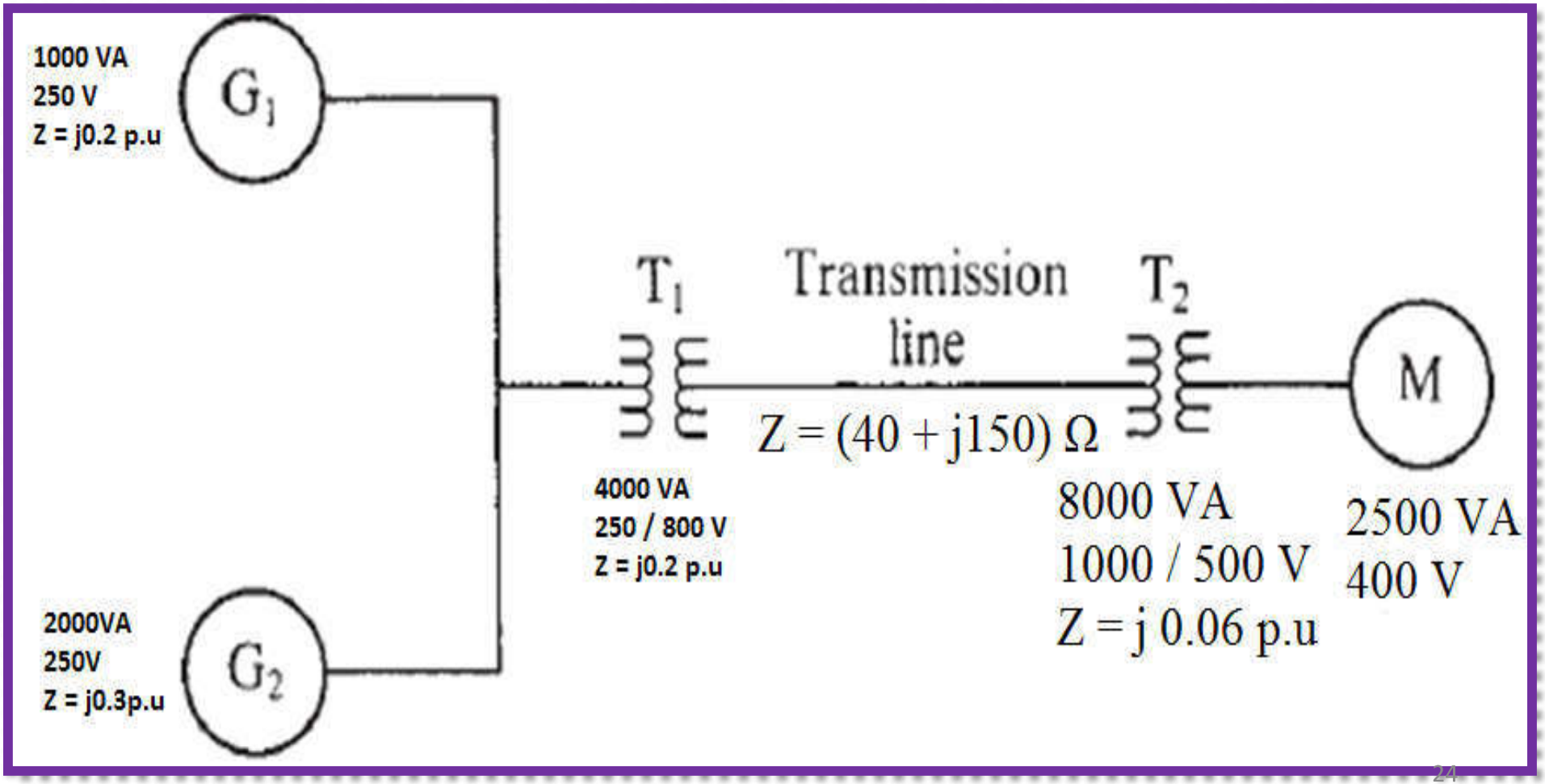

❖Example:

❖Solution:

❖We know that the formula for new per unit impedance is given by:

$$Z_{(p.u)new} = Z_{(p.u)old} \times \left[\frac{base\,kV_{given}}{base\,kV_{new}}\right]^2 \times \frac{base\,kVA_{new}}{base\,kVA_{given}}$$

❖New Per unit Impedance of Generator G_1:

$$Z_{G_1(p.u)new} = j0.2 \times \left[\frac{250}{250}\right]^2 \times \frac{5\times1000}{1\times1000} = j0.2\times1\times\frac{5}{1} = j0.2\times1\times5 = j1.0\ p.u$$

❖New Per unit Impedance of Generator G_2:

$$Z_{G_2(p.u)new} = j0.3 \times \left[\frac{250}{250}\right]^2 \times \frac{5\times1000}{2\times1000} = j0.3\times1\times\frac{5}{2} = \frac{j1.5}{2} = j0.75\ p.u$$

❖Example:

❖New Per unit Impedance of Transformer T_1:

$$Z_{T_1(p.u)_{new}} = j0.2 \times \left[\frac{250}{250}\right]^2 \times \frac{5 \times 1000}{4 \times 1000} = j0.2 \times 1 \times \frac{5}{4} = \frac{j1.0}{4} = j0.25\ p.u$$

❖New Per unit Impedance of Transmission Line:

❖It can be observed that for transmission line the base voltage is changed. Hence, first new base voltage is required to determined. Then, its per unit impedance can be calculated. The formula for finding new base voltage is given by:

$$New\ Base\ Voltage = Old\ Base\ Voltage \times \frac{E_2}{E_1}$$

$$New\ Base\ Voltage = 250 \times \frac{800}{250} = 800\,V$$

❖Now, it can be noticed that the impedance of transmission line is given in ohms instead of per unit values. Hence, the formula to find per unit impedance of transmission line is given by:

❖Example:

$$Z_{p.u} = Z_{ohms} \times \frac{Base\,kVA}{(Base\,kV)^2}$$

$$Z_{Line(p.u)} = (40 + j150) \times \frac{5 \times 1000}{(800)^2} = (40 + j150) \times \frac{5 \times 1000}{640{,}000} = (40 + j150) \times \frac{5}{640}$$

$$Z_{Line(p.u)} = \frac{(200 + j750)}{640} = (0.3125 + j1.1718)\ p.u$$

❖New Per unit Impedance of Transformer T_2:

$$Z_{T_2(p.u)_{new}} = j0.06 \times \left[\frac{1{,}000}{800}\right]^2 \times \frac{5000}{8000} = j0.06 \times \left[\frac{10}{8}\right]^2 \times \frac{5}{8} = j0.06 \times \left[\frac{5}{4}\right]^2 \times \frac{5}{8}$$

$$Z_{T_2(p.u)_{new}} = j0.06 \times [1.25]^2 \times 0.625 = j0.06 \times 1.5625 \times 0.625 = j0.0585\ p.u$$

❖New Per unit Impedance of Load:

❖It can be observed that for load, due to transformer, the base voltage is again changed. Hence, first new base voltage is required to determined. By using the formula for finding new base voltage we get:

❖Example:

$$New\ Base\ Voltage = 800 \times \frac{500}{1{,}000} = 800 \times \frac{5}{10} = 800 \times \frac{1}{2} = 400\,V$$

❖Now, it can be noticed that in data, rated kVA of motor is given instead of its impedance. Hence, we require only to calculate the per unit kVA which is given by:

$$Apparent\ Power\ (S)_{p.u} = \frac{Actual\ Apparent\ Power}{Base\ Apparent\ Power\ (S_B)} = \frac{2{,}500}{5{,}000} = 0.5\ p.u$$

❖Based upon these per unit values, the given one line diagram can be converted into its equivalent impedance diagram as below:

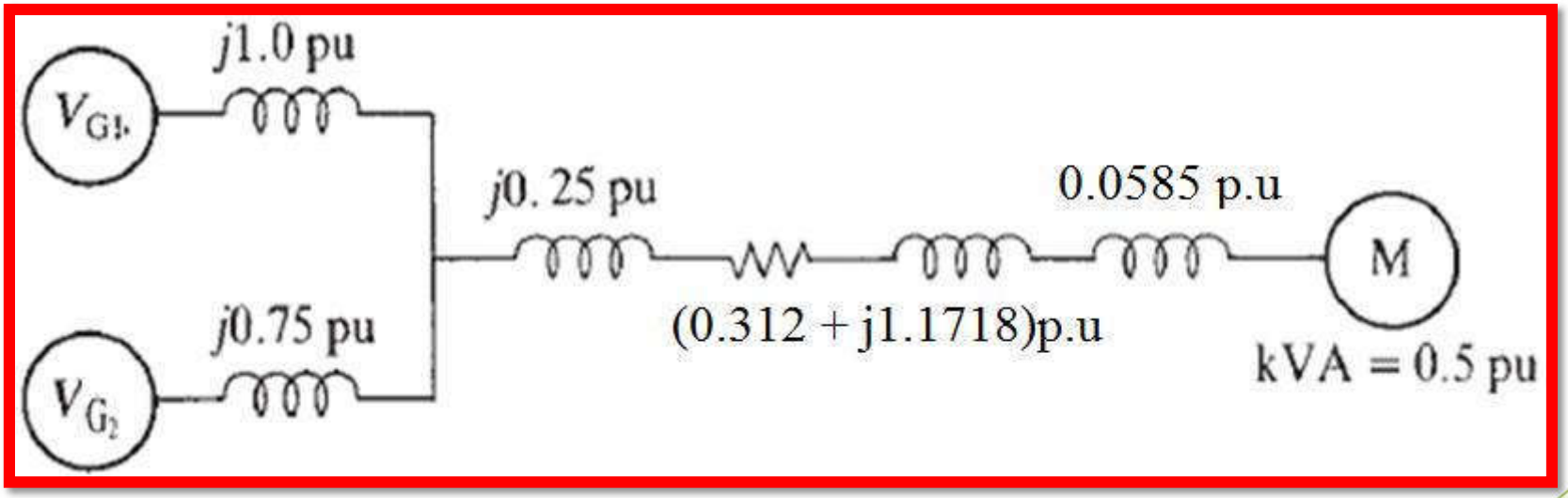

Answer

❖Example:

Hadi Sadat Method Chapter Three, Example 3.7

❖The one line diagram of a three phase power system is shown in Figure. Select a common base of 100 MVA and 22 kV on the generator side. Drawn an impedance diagram with all impedances including the load impedance marked in per unit. The three phase load at bus 4 absorbs 57 MVA, 0.6 power factor lagging at 10.45 kV. Line 1 and 2 have reactance of 48.4 ohms and 65.3 ohms respectively. The manufacturer's data for each device is given as follow:

Name	*S*	*V*	*Xp.u*	*Name*	*S*	*V*	*Xp.u*
G	$90MVA$	$22kV$	X=18%	T_1	$50MVA$	$22/220kV$	X=10%
T_2	$40MVA$	$220/11kV$	X=6.0%	T_3	$40MVA$	$22/110kV$	X=6.4%
T_4	$40MVA$	$110/11kV$	X=8.0%	M	$66.5MVA$	$10.45kV$	X=18.5%

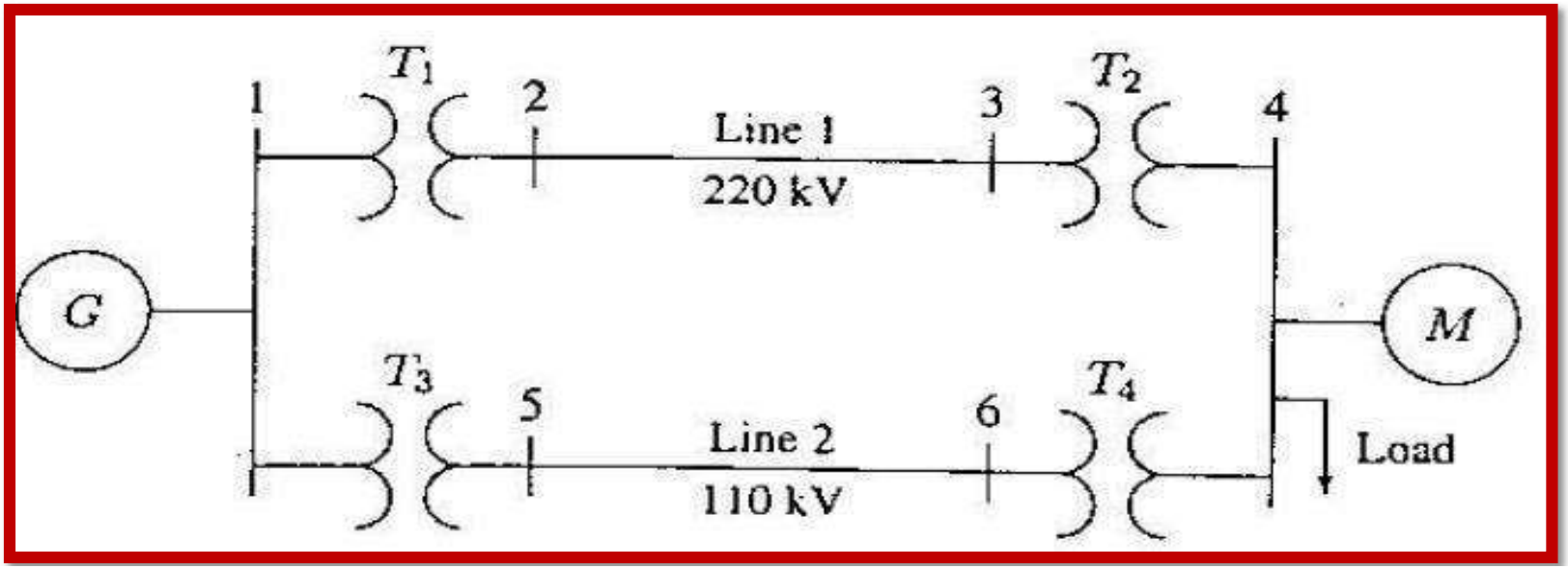

❖Solution:

❖The reactance is given in percent. Its per unit is obtained by dividing it by 100. such as 18% = 18/100 = 0.18p.u

❖We know that the formula for new per unit impedance is given by:

$$Z_{(p.u)new} = Z_{(p.u)old} \times \left[\frac{base\,kV_{given}}{base\,kV_{new}}\right]^2 \times \frac{base\,kVA_{new}}{base\,kVA_{given}}$$

❖New Per unit Reactance of Generator *G:*

$$X_{G(p.u)new} = j0.18 \times \left[\frac{22\times10^3}{22\times10^3}\right]^2 \times \frac{100\times10^6}{90\times10^6} = j0.18\times1\times\frac{10}{9} = \frac{j1.8}{9} = j0.2\ p.u$$

❖New Per unit Reactance of Transformer T_1:

$$X_{T_1(p.u)new} = j0.1 \times \left[\frac{22\times10^3}{22\times10^3}\right]^2 \times \frac{100\times10^6}{50\times10^6} = j0.1\times1\times\frac{10}{5} = \frac{j1.0}{5} = j0.2\ p.u$$

❖New Per unit Reactance of Transmission Line 1:

❖It can be observed that for transmission line the base voltage is changed. Hence, first new base voltage is required to determined, then its per unit reactance can be calculated. The formula for finding new base voltage is given by:

❖Example:

$$New\ Base\ Voltage = Old\ Base\ Voltage \times \frac{E_2}{E_1}$$

$$New\ Base\ Voltage = 22\,kV \times \frac{220\,kV}{22\,kV} = 220\,kV$$

❖Now, it can be noticed that the reactance of transmission line is given in ohms instead of per unit values. Hence, the formula to find per unit reactance of transmission line is given by:

$$Z_{p.u} = Z_{ohms} \times \frac{S_B}{V^2{}_B} = Z_{ohms} \times \frac{Base\ kVA}{(Base\ kV)^2}$$

$$X_{Line1(p.u)} = (j48.4) \times \frac{100 \times 10^6}{(220 \times 10^3)^2} = (j48.4) \times \frac{100}{48400} = \frac{j4840}{48400} = j0.1\ p.u$$

❖New Per unit Reactance of Transformer T_2:

$$X_{T_2(p.u)_{new}} = j0.06 \times \left[\frac{220 \times 10^3}{220 \times 10^3}\right]^2 \times \frac{100 \times 10^6}{40 \times 10^6} = j0.06 \times 1 \times \frac{10}{4} = \frac{j0.6}{4} = j0.15\ p.u$$

❖Example:

❖New Per unit Reactance of Transformer T_3:

$$X_{T_3(p.u)_{new}} = j0.064 \times \left[\frac{22\times10^3}{22\times10^3}\right]^2 \times \frac{100\times10^6}{40\times10^6} = j0.064\times1\times\frac{10}{4} = \frac{j0.64}{4} = j0.16\ p.u$$

❖New Per unit Reactance of Transmission Line 2:

❖It can be observed that for transmission line 2, the base voltage is changed again. The new base voltage is calculated as below:

$$New\ Base\ Voltage = 22\,kV \times \frac{110\,kV}{22\,kV} = 110\,kV$$

❖Now, it can be noticed that the reactance of transmission line is given in ohms instead of per unit values. Hence, the per unit reactance of transmission line is calculated as below:

$$X_{Line2(p.u)} = (j65.3)\times\frac{100\times10^6}{(110\times10^3)^2} = (j65.3)\times\frac{100}{12100} = \frac{j6530}{12100} = j0.54\ p.u$$

❖Example:

❖New Per unit Reactance of Transformer T_4:

$$X_{T_4(p.u)_{new}} = j0.08 \times \left[\frac{110\times10^3}{110\times10^3}\right]^2 \times \frac{100\times10^6}{40\times10^6} = j0.08\times1\times\frac{10}{4} = \frac{j0.8}{4} = j0.2\ p.u$$

❖New Per unit Reactance of Motor *M*:

❖It can be observed that for motor, the base voltage is changed again from two points. One from transformer T_2 and other from transformer T_4. but, the new base voltage from both must have the same value. The new base voltage as calculated from Transformer T_2 is given as below:

$$New\ Base\ Voltage = 220\,kV \times \frac{11\,kV}{220\,kV} = 11\,kV$$

The new base voltage as calculated from Transformer T_4 is given as below:

$$New\ Base\ Voltage = 110\,kV \times \frac{11\,kV}{110\,kV} = 11\,kV$$

It can be noticed that both has the same voltage. The per unit reactance of motor is now calculated as below:

❖Example:

$$X_{M(p.u)_{new}} = j0.185\times\left[\frac{10.45\times10^3}{11\times10^3}\right]^2\times\frac{100\times10^6}{66.5\times10^6} = j0.185\times(0.95)^2\times1.5037$$

$$X_{M(p.u)_{new}} = j0.185\times0.9025\times1.5037 = j0.25\ p.u$$

❖New Per unit Impedance of Load:

The load apparent power at 0.6 power factor lagging is 57 MVA. The angle for 0.6 power factor will be:

$$\cos(\theta) = 0.6;\quad \theta = \cos^{-1}(0.6) = 53.13°$$

Hence, the load is 57<53.13 degree *MVA*. To calculate the per unit impedance of the load, we need to first calculate actual impedance and base impedance of the load. The actual impedance of the load is calculated as below:

$$Z_{L(Actual)} = \frac{(V_{L-L})^2}{S^*_{L(3\phi)}} = \frac{(10.45\times10^3)^2}{57\times10^6\angle-53.13} = \frac{109.2025}{57\angle-53.13} = 1.91583\angle53.13$$

$$Z_{L(Actual)} = 1.91583\times(\cos53.13 + j\sin53.13) = 1.91583\times(0.6 + j0.8)$$

$$Z_{L(Actual)} = (1.1495 + j1.53267)\,\Omega$$

❖Example:

The base impedance of the load is calculated as below:

$$Z_{L(Base)} = \frac{(V_{Base})^2}{S_{Base}} = \frac{(11\times10^3)^2}{100\times10^6} = \frac{121}{100} = 1.21\Omega$$

Now, the per unit impedance is calculated as below:

$$Z_{L(p.u)} = \frac{Z_{L(Actual)}}{Z_{L(Base)}} = \frac{1.1495 + j1.53267}{1.21} = (0.95 + j1.2667)\ p.u$$

❖Example:

The per unit circuit is now given as below:

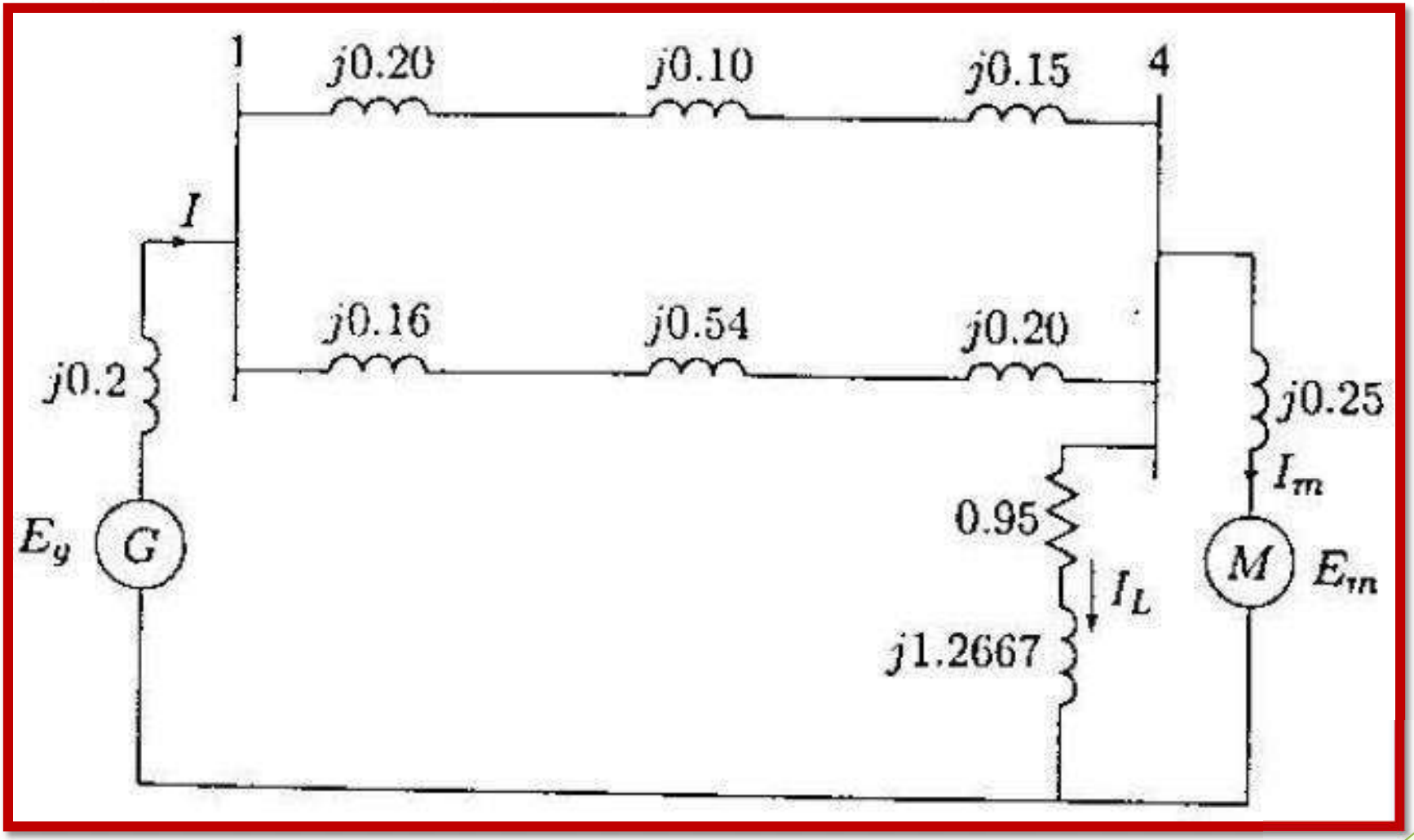

Answer

❖Example:

D.Das Book Method (Electrical Power System Example 5.8)

❖The one line diagram of a three phase power system is shown in Figure. Select a common base of 100 MVA and 13.8 kV on the generator side. Drawn an impedance diagram with all impedances including the load impedance marked in per unit. The three phase load at bus 4 absorbs 57 MVA, 0.8 power factor lagging at 10.45 kV. Line 1 and 2 have reactance of 50 ohms and 70 ohms respectively. The manufacturer's data for each device is given as follow:

Name	*S*	*V*	*Xp.u*	*Name*	*S*	*V*	*Xp.u*
G	$90MVA$	$13.8kV$	X=18%	T_1	$50MVA$	$13.8/220kV$	X=10%
T_2	$50MVA$	$220/11kV$	X=10.0%	T_3	$50MVA$	$13.8/132kV$	X=10.0%
T_4	$50MVA$	$132/11kV$	X=10.0%	M	$80MVA$	$10.45kV$	X=20%

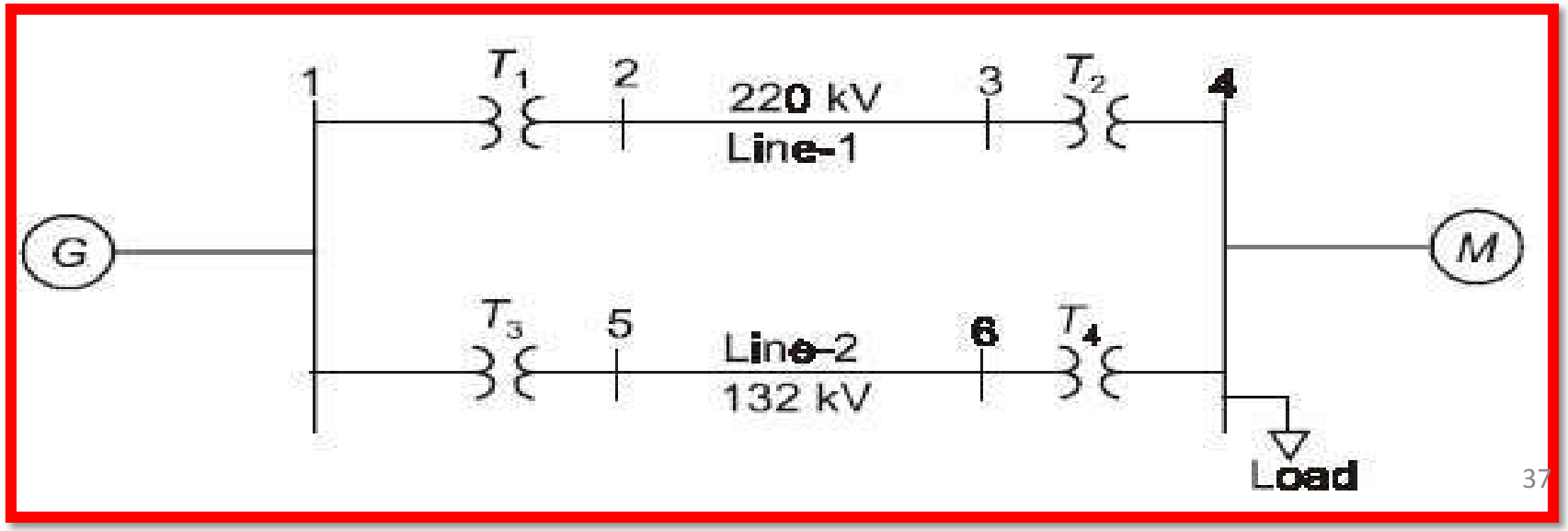

❖Solution:

❖We know that the formula for new per unit impedance is given by:

$$Z_{(p.u)new} = Z_{(p.u)old} \times \left[\frac{base\,kV_{given}}{base\,kV_{new}}\right]^2 \times \frac{base\,kVA_{new}}{base\,kVA_{given}}$$

❖New Per unit Reactance of Generator *G:*

$$X_{G(p.u)new} = j0.18 \times \left[\frac{13.8\times10^3}{13.8\times10^3}\right]^2 \times \frac{100\times10^6}{90\times10^6} = j0.18\times1\times\frac{10}{9} = \frac{j1.8}{9} = j0.2\ p.u$$

❖New Per unit Reactance of Transformer T_1:

$$X_{T_1(p.u)new} = j0.1 \times \left[\frac{13.8\times10^3}{13.8\times10^3}\right]^2 \times \frac{100\times10^6}{50\times10^6} = j0.1\times1\times\frac{10}{5} = \frac{j1.0}{5} = j0.2\ p.u$$

❖New Per unit Reactance of Transmission Line 1:

❖It can be observed that for transmission line the base voltage is changed. Hence, first new base voltage is required to determined, then its per unit reactance can be calculated. The formula for finding new base voltage is given by:

❖Example:

$$New\ Base\,Voltage = Old\ \ Base\,Voltage \times \frac{E_2}{E_1}$$

$$New\ Base\,Voltage = 13.8\ kV \times \frac{220\ kV}{13.8\ kV} = 220\ kV$$

❖Now, it can be noticed that the reactance of transmission line is given in ohms instead of per unit values. Hence, the formula to find per unit reactance of transmission line is given by:

$$Z_{p.u} = Z_{ohms} \times \frac{S_B}{V^2{}_B} = Z_{ohms} \times \frac{Base\ kVA}{(Base\ kV)^2}$$

$$X_{Line1(p.u)} = j50 \times \frac{100 \times 10^6}{(220 \times 10^3)^2} = (j50) \times \frac{100}{48400} = \frac{j5000}{48400} = j0.1033\ p.u$$

❖New Per unit Reactance of Transformer T_2:

$$X_{T_2(p.u)_{new}} = j0.1 \times \left[\frac{220 \times 10^3}{220 \times 10^3}\right]^2 \times \frac{100 \times 10^6}{50 \times 10^6} = j0.1 \times 1 \times \frac{10}{5} = \frac{j1.0}{5} = j0.2\ p.u$$

❖Example:

❖New Per unit Reactance of Transformer T_3:

$$X_{T_3(p.u)_{new}} = j0.1 \times \left[\frac{22\times10^3}{22\times10^3}\right]^2 \times \frac{100\times10^6}{50\times10^6} = j0.1\times1\times\frac{10}{5} = \frac{j1.0}{5} = j0.2\ p.u$$

❖New Per unit Reactance of Transmission Line 2:

❖It can be observed that for transmission line 2, the base voltage is changed again. The new base voltage is calculated as below:

$$New\ Base\ Voltage = 22\,kV \times \frac{132\,kV}{22\,kV} = 132\,kV$$

❖Now, it can be noticed that the reactance of transmission line is given in ohms instead of per unit values. Hence, the per unit reactance of transmission line is calculated as below:

$$X_{Line2(p.u)} = (j70)\times\frac{100\times10^6}{(132\times10^3)^2} = (j70)\times\frac{100}{17424} = \frac{j7000}{17424} = j0.4017\ p.u$$

❖Example:

❖New Per unit Reactance of Transformer T_4:

$$X_{T_4(p.u)_{new}} = j0.1\times\left[\frac{132\times10^3}{132\times10^3}\right]^2\times\frac{100\times10^6}{50\times10^6} = j0.1\times1\times\frac{10}{5} = \frac{j1.0}{5} = j0.2\ p.u$$

❖New Per unit Reactance of Motor *M*:

❖It can be observed that for motor, the base voltage is changed again from two points. One from transformer T_2 and other from transformer T_4. but, the new base voltage from both must have the same value. The new base voltage as calculated from Transformer T_2 is given as below:

$$New\ Base\ Voltage = 220\,kV\times\frac{11\,kV}{220\,kV} = 11\,kV$$

The new base voltage as calculated from Transformer T_4 is given as below:

$$New\ Base\ Voltage = 132\,kV\times\frac{11\,kV}{132\,kV} = 11\,kV$$

It can be noticed that both has the same voltage. The per unit reactance of motor is now calculated as below:

❖Example:

$$X_{M(p.u)_{new}} = j0.2 \times \left[\frac{10.45\times10^3}{11\times10^3}\right]^2 \times \frac{100\times10^6}{80\times10^6} = j0.2\times(0.95)^2\times1.25$$

$$X_{M(p.u)_{new}} = j0.2\times0.9025\times1.25 = j0.2256\ p.u$$

❖New Per unit Impedance of Load:

The load apparent power at 0.8 power factor lagging is 57 MVA. The angle for 0.8 power factor will be:

$$\cos(\theta) = 0.8; \quad \theta = \cos^{-1}(0.8) = 36.87°$$

Hence, the load is 57<36.87 degree *MVA*. To calculate the per unit impedance of the load, we need to first calculate actual impedance and base impedance of the load. The actual impedance of the load is calculated as below:

$$Z_{L(Actual)} = \frac{(V_{L-L})^2}{S^*_{L(3\phi)}} = \frac{(10.45\times10^3)^2}{57\times10^6\angle-36.87} = \frac{109.2025}{57\angle-36.87} = 1.91583\angle36.87$$

$$Z_{L(Actual)} = 1.91583\times(\cos36.87 + j\sin36.87) = 1.91583\times(0.8 + j0.6)$$

$$Z_{L(Actual)} = (1.53267 + j1.1495)\ \Omega$$

❖Example:

The base impedance of the load is calculated as below:

$$Z_{L(Base)} = \frac{(V_{Base})^2}{S_{Base}} = \frac{(11\times10^3)^2}{100\times10^6} = \frac{121}{100} = 1.21\Omega$$

Now, the per unit impedance is calculated as below:

$$Z_{L(p.u)} = \frac{Z_{L(Actual)}}{Z_{L(Base)}} = \frac{1.53267 + j1.1495}{1.21} = (1.2667 + j0.95)\ p.u$$

❖Example:

The per unit circuit is now given as below:

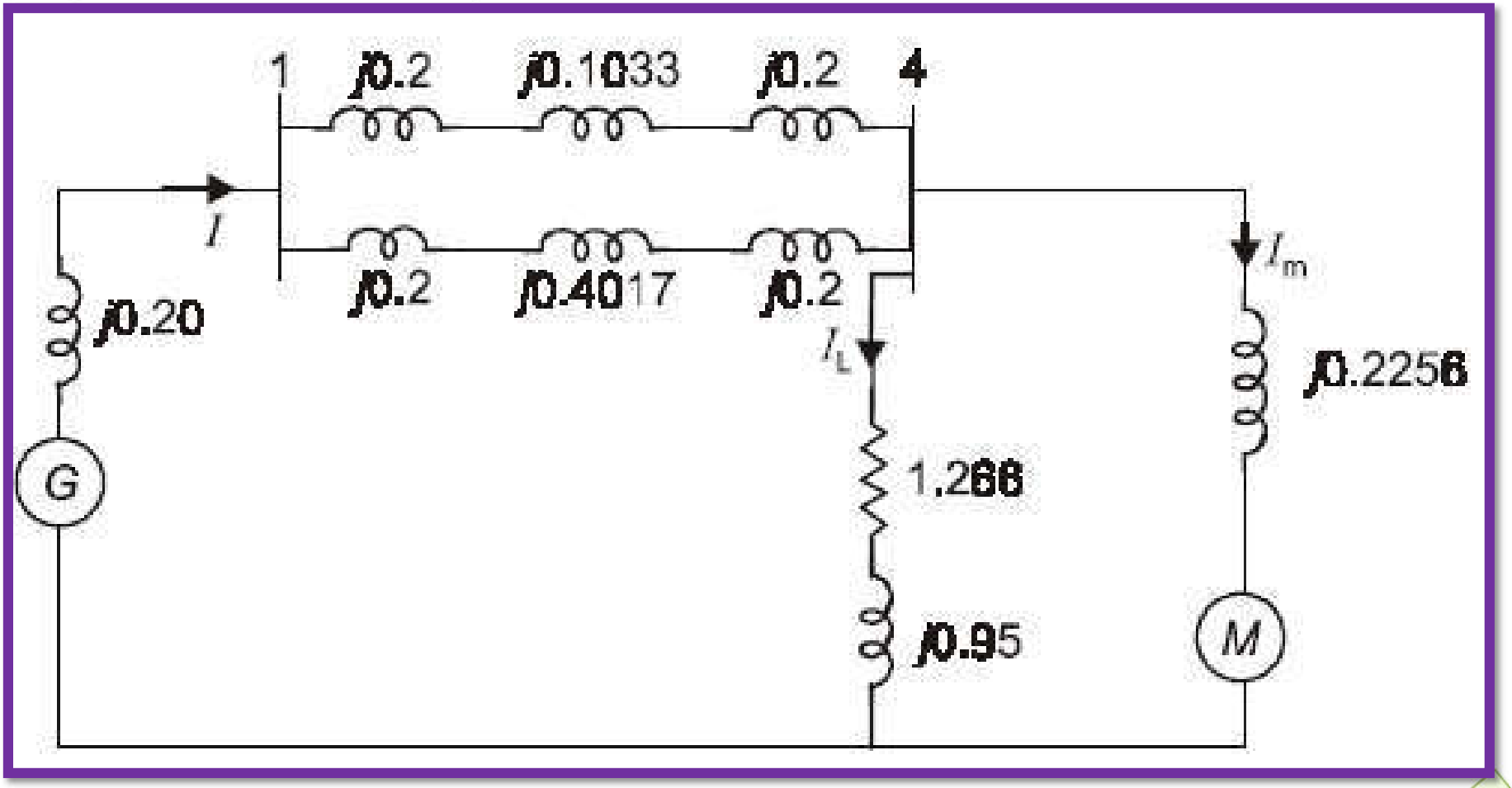

Answer

❖Example:

D.Das Book Method (Electrical Power System Example 5.4)

❖A 100 MVA, 33 kV, three phase generator has a reactance of 15%. The generator is connected to the motors through a transmission line and transformers as shown in Figure. Motors have rated inputs of 40 MVA, 30 MVA, and 20 MVA at 30 kV with 20% reactance each. Draw the per unit circuit diagram. Assume 100 MVA and 33 kV as common base values.

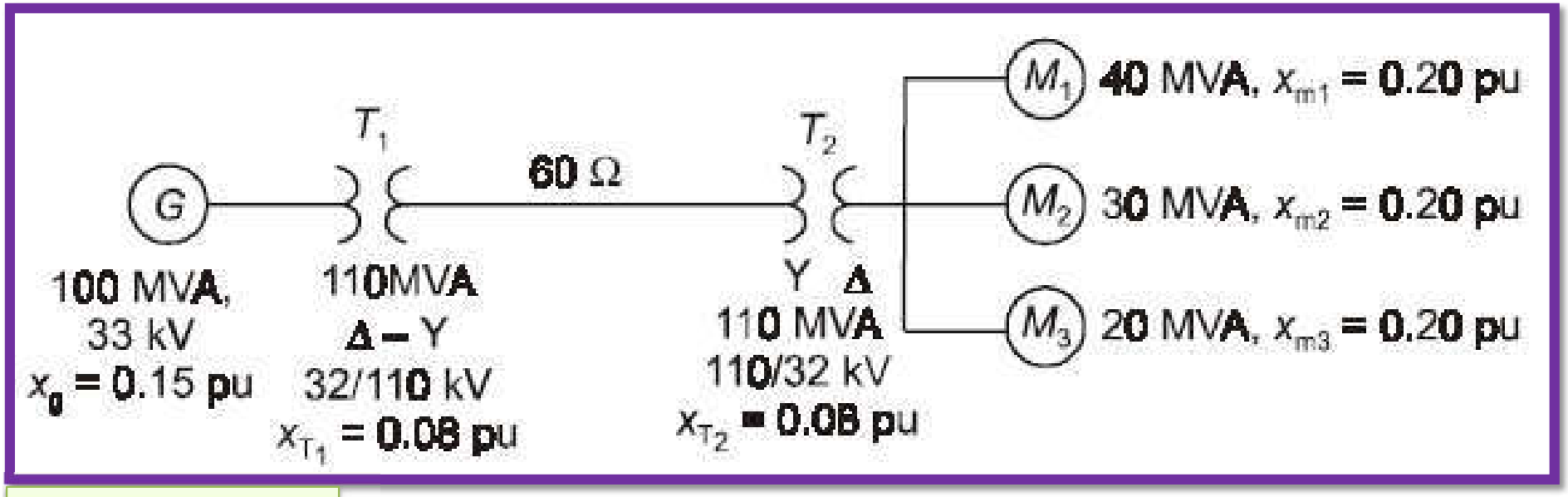

❖Solution:

❖We know that the formula for new per unit impedance is given by:

$$Z_{(p.u)new} = Z_{(p.u)old} \times \left[\frac{base\,kV_{given}}{base\,kV_{new}}\right]^2 \times \frac{base\,kVA_{new}}{base\,kVA_{given}}$$

❖Example:

❖New Per unit Reactance of Generator *G:*

$$X_{G(p.u)_{new}} = j0.15 \times \left[\frac{33\times10^3}{33\times10^3}\right]^2 \times \frac{100\times10^6}{100\times10^6} = j0.15\times1\times1 = j0.15\ p.u$$

❖New Per unit Reactance of Transformer T_1:

$$X_{T_1(p.u)_{new}} = j0.08 \times \left[\frac{32\times10^3}{33\times10^3}\right]^2 \times \frac{100\times10^6}{110\times10^6} = j0.08 \times \left[\frac{32}{33}\right]^2 \times \frac{10}{11}$$

$$X_{T_1(p.u)_{new}} = j0.08 \times [0.9696]^2 \times 0.90909 = j0.08 \times 0.94012 \times 0.90909 = j0.0683\ p.u$$

❖New Per unit Reactance of Transmission Line:

❖It can be observed that for transmission line the base voltage is changed. The new base voltage is determined by:

$$New\ Base\ Voltage = 33\ kV \times \frac{110\ kV}{32\ kV} = 33\ kV \times 3.4375 = 113.4375\ kV$$

❖Now, it can be noticed that the reactance of transmission line is given in ohms instead of per unit values. Hence, the new per unit reactance of transmission line is given by:

❖Example:

$$X_{Line(p.u)} = j60 \times \frac{100\times10^6}{(113.4375\times10^3)^2} = (j60)\times\frac{100}{12868.066} = \frac{j6000}{12868.066} = j0.466\ p.u$$

❖New Per unit Reactance of Transformer T_2:

$$X_{T_2(p.u)_{new}} = j0.08\times\left[\frac{110\times10^3}{113.4375\times10^3}\right]^2 \times \frac{100\times10^6}{110\times10^6} = j0.08\times\left[\frac{110}{113.4375}\right]^2\times\frac{10}{11}$$

$$X_{T_2(p.u)_{new}} = j0.08\times[0.9696]^2\times0.90909 = j0.08\times0.94012\times0.90909 = j0.0683\ p.u$$

❖New Per unit Reactance of Motor M_1:

❖It can be observed that for motor, the base voltage is changed again. The new base voltage is calculated as below:

$$New\ Base\ Voltage = 113.4375\,kV\times\frac{32\,kV}{110\,kV} = 113.4375\,kV\times0.2909 = 33\,kV$$

❖The per unit reactance of motor 1 is now calculated as below:

❖Example:

$$X_{M_1(p.u)_{new}} = j0.2 \times \left[\frac{30\times10^3}{33\times10^3}\right]^2 \times \frac{100\times10^6}{40\times10^6} = j0.2 \times \left[\frac{30}{33}\right]^2 \times \frac{10}{4}$$

$$X_{M_1(p.u)_{new}} = j0.2 \times [0.90909]^2 \times 2.5 = j0.2 \times 0.8263 \times 2.5 = j0.413\ p.u$$

❖New Per unit Reactance of Motor M_2:

$$X_{M_2(p.u)_{new}} = j0.2 \times \left[\frac{30\times10^3}{33\times10^3}\right]^2 \times \frac{100\times10^6}{30\times10^6} = j0.2 \times \left[\frac{30}{33}\right]^2 \times \frac{10}{3}$$

$$X_{M_2(p.u)_{new}} = j0.2 \times [0.90909]^2 \times 3.333 = j0.2 \times 0.8263 \times 3.333 = j0.551\ p.u$$

❖New Per unit Reactance of Motor M_3:

$$X_{M_3(p.u)_{new}} = j0.2 \times \left[\frac{30\times10^3}{33\times10^3}\right]^2 \times \frac{100\times10^6}{20\times10^6} = j0.2 \times \left[\frac{30}{33}\right]^2 \times \frac{10}{2}$$

$$X_{M_3(p.u)_{new}} = j0.2 \times [0.90909]^2 \times 5 = j0.2 \times 0.8263 \times 5 = j0.826\ p.u$$

❖Example:

The per unit circuit is now given as below:

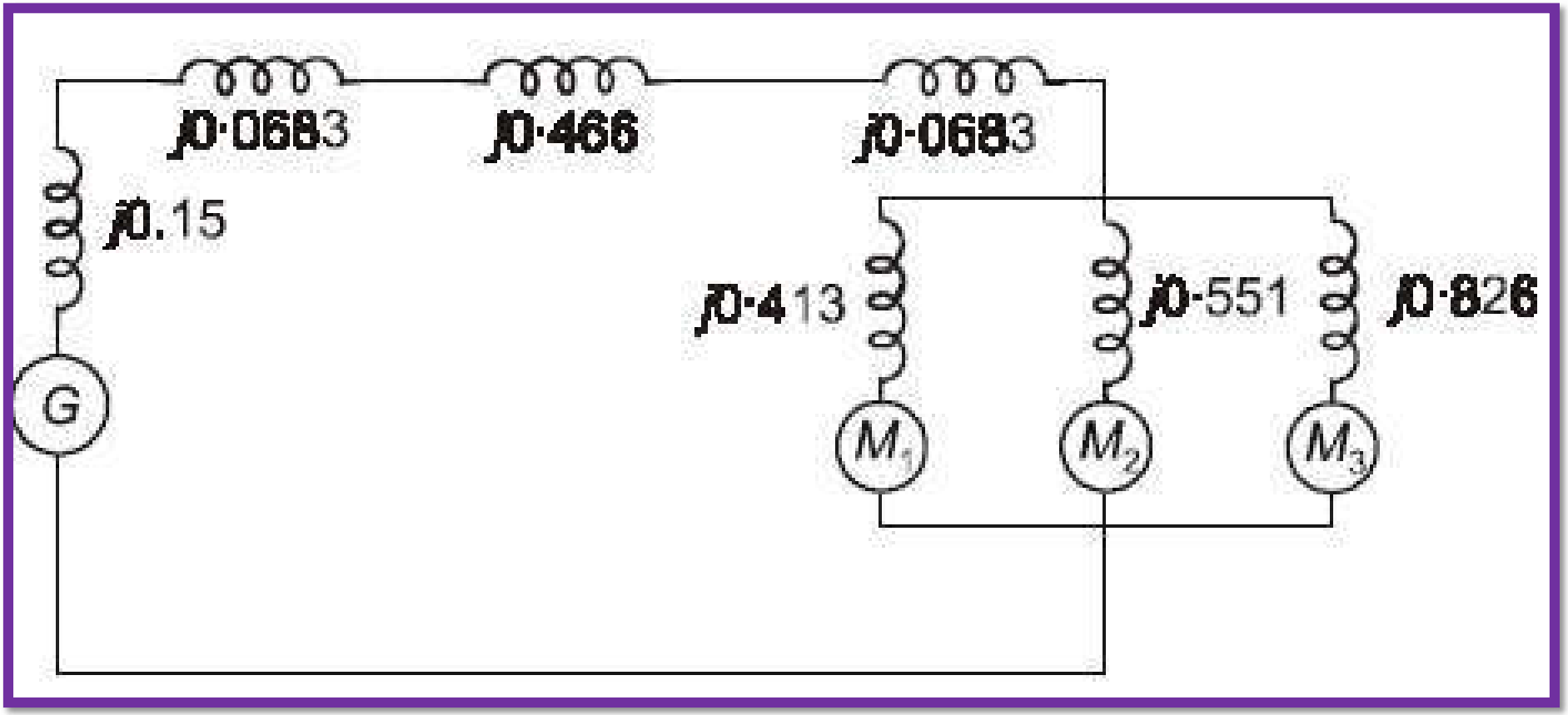

Answer

❖Example:

C.L.Wadhwa Book Method (Electrical Power System Example 1.1)

❖A 100 MVA, 33 kV, three phase generator has a sub transient reactance of 15%. The generator is connected to the motors through a transmission line and transformers as shown in Figure. Motors have rated inputs of 30 MVA, 20 MVA, and 50 MVA at 30 kV with 20% sub transient reactance each. Selecting the generator rating as the base quantities in the generator circuit, Draw the per unit circuit diagram.

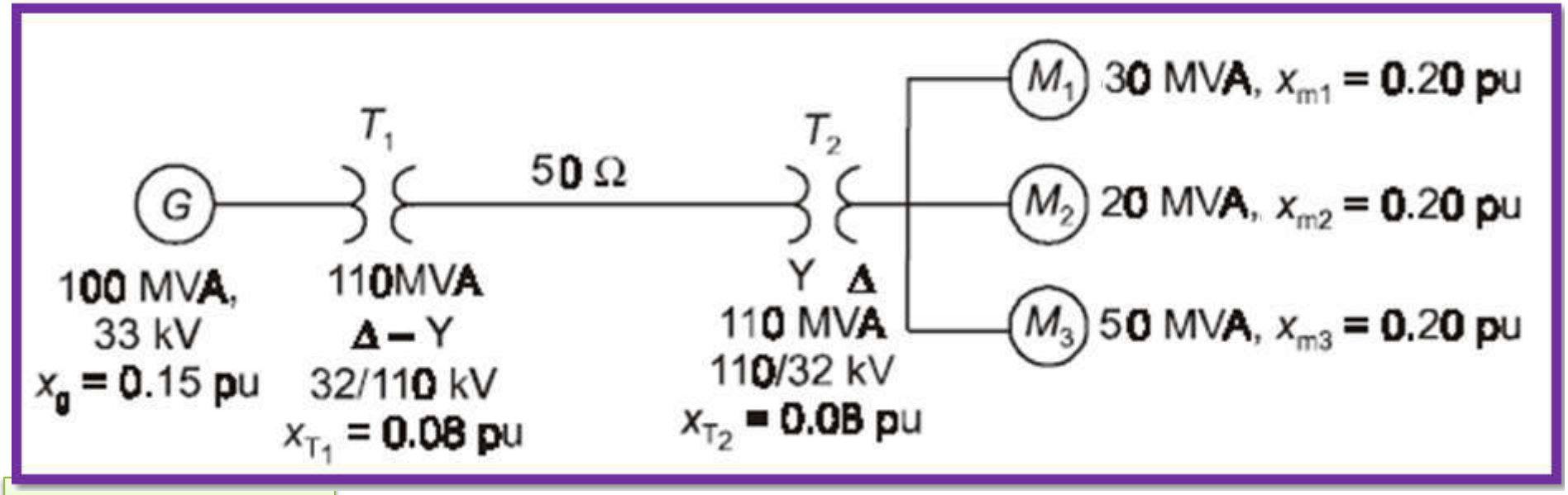

❖Solution:

❖We know that the formula for new per unit impedance is given by:

$$Z_{(p.u)new} = Z_{(p.u)old} \times \left[\frac{base\,kV_{given}}{base\,kV_{new}}\right]^2 \times \frac{base\,kVA_{new}}{base\,kVA_{given}}$$

❖Example:

❖New Per unit Reactance of Generator *G:*

$$X_{G(p.u)_{new}} = j0.15 \times \left[\frac{33\times10^3}{33\times10^3}\right]^2 \times \frac{100\times10^6}{100\times10^6} = j0.15\times1\times1 = j0.15\ p.u$$

❖New Per unit Reactance of Transformer T_1:

$$X_{T_1(p.u)_{new}} = j0.08 \times \left[\frac{32\times10^3}{33\times10^3}\right]^2 \times \frac{100\times10^6}{110\times10^6} = j0.08 \times \left[\frac{32}{33}\right]^2 \times \frac{10}{11}$$

$$X_{T_1(p.u)_{new}} = j0.08 \times [0.9696]^2 \times 0.90909 = j0.08 \times 0.94012 \times 0.90909 = j0.06838\ p.u$$

❖New Per unit Reactance of Transmission Line:

❖It can be observed that for transmission line the base voltage is changed. The new base voltage is determined by:

$$New\ Base\ Voltage = 33\ kV \times \frac{110\ kV}{32\ kV} = 33\ kV \times 3.4375 = 113.4375\ kV$$

❖Now, it can be noticed that the reactance of transmission line is given in ohms instead of per unit values. Hence, the new per unit reactance of transmission line is given by:

❖Example:

$$X_{Line(p.u)} = j50 \times \frac{100 \times 10^6}{(113.4375 \times 10^3)^2} = (j50) \times \frac{100}{12868.066} = \frac{j5000}{12868.066} = j0.3888\, p.u$$

❖New Per unit Reactance of Transformer T_2:

$$X_{T_2(p.u)_{new}} = j0.08 \times \left[\frac{110 \times 10^3}{113.4375 \times 10^3}\right]^2 \times \frac{100 \times 10^6}{110 \times 10^6} = j0.08 \times \left[\frac{110}{113.4375}\right]^2 \times \frac{10}{11}$$

$$X_{T_2(p.u)_{new}} = j0.08 \times [0.9696]^2 \times 0.90909 = j0.08 \times 0.94012 \times 0.90909 = j0.06838\, p.u$$

❖New Per unit Reactance of Motor M_1:

❖It can be observed that for motor, the base voltage is changed again. The new base voltage is calculated as below:

$$New\ Base\ Voltage = 113.4375\, kV \times \frac{32\, kV}{110\, kV} = 113.4375\, kV \times 0.2909 = 33\, kV$$

❖The per unit reactance of motor 1 is now calculated as below:

❖Example:

$$X_{M_1(p.u)_{new}} = j0.2 \times \left[\frac{30\times10^3}{33\times10^3}\right]^2 \times \frac{100\times10^6}{30\times10^6} = j0.2 \times \left[\frac{30}{33}\right]^2 \times \frac{10}{3}$$

$$X_{M_1(p.u)_{new}} = j0.2 \times [0.90909]^2 \times 3.333 = j0.2 \times 0.8263 \times 3.333 = j0.5509\ p.u$$

❖New Per unit Reactance of Motor M_2:

$$X_{M_2(p.u)_{new}} = j0.2 \times \left[\frac{30\times10^3}{33\times10^3}\right]^2 \times \frac{100\times10^6}{20\times10^6} = j0.2 \times \left[\frac{30}{33}\right]^2 \times \frac{10}{2}$$

$$X_{M_2(p.u)_{new}} = j0.2 \times [0.90909]^2 \times 5 = j0.2 \times 0.8263 \times 5 = j0.826\ p.u$$

❖New Per unit Reactance of Motor M_3:

$$X_{M_3(p.u)_{new}} = j0.2 \times \left[\frac{30\times10^3}{33\times10^3}\right]^2 \times \frac{100\times10^6}{50\times10^6} = j0.2 \times \left[\frac{30}{33}\right]^2 \times \frac{10}{5}$$

$$X_{M_3(p.u)_{new}} = j0.2 \times [0.90909]^2 \times 2 = j0.2 \times 0.8263 \times 2 = j0.3305\ p.u$$

❖Example:

The per unit circuit is now given as below:

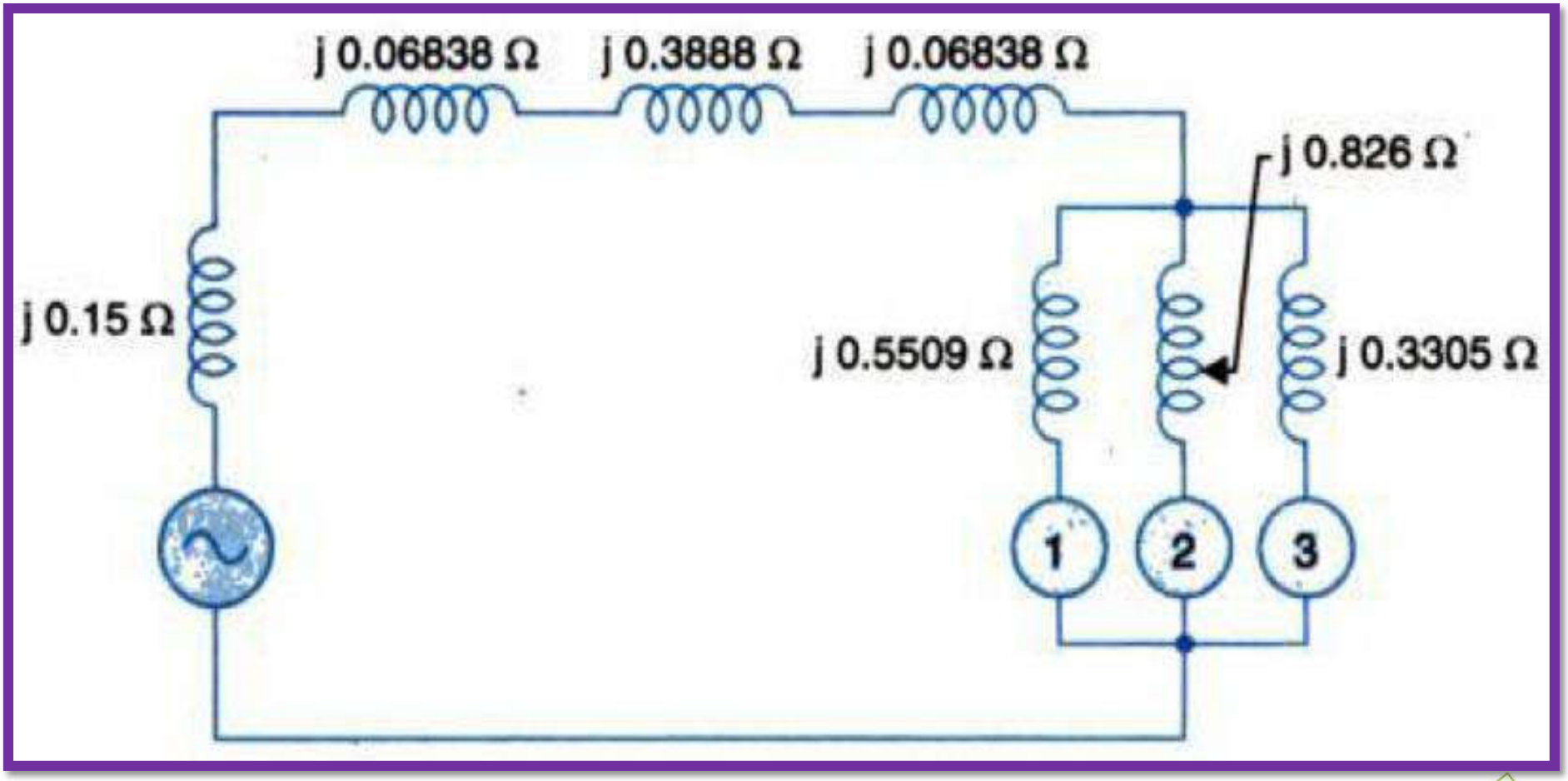

Answer