Practice Problem 3.6

Using mesh analysis, find I_o in the circuit of Fig. 3.21.

Answer: -4 A.

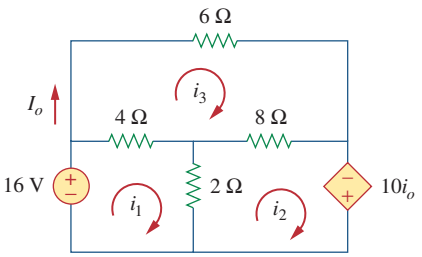

Figure 3.21
For Practice Prob. 3.6.

3.5 Mesh Analysis with Current Sources

Applying mesh analysis to circuits containing current sources (dependent or independent) may appear complicated. But it is actually much easier than what we encountered in the previous section, because the presence of the current sources reduces the number of equations. Consider the following two possible cases.

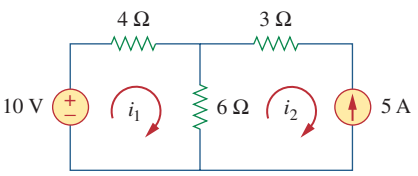

Figure 3.22
A circuit with a current source.

CASE 1 When a current source exists only in one mesh: Consider the circuit in Fig. 3.22, for example. We set $i_2 = -5$ A and write a mesh equation for the other mesh in the usual way; that is,

$$-10 + 4i_1 + 6(i_1 - i_2) = 0 \quad \Rightarrow \quad i_1 = -2 \text{ A} \qquad \textbf{(3.17)}$$

CASE 2 When a current source exists between two meshes: Consider the circuit in Fig. 3.23(a), for example. We create a *supermesh* by excluding the current source and any elements connected in series with it, as shown in Fig. 3.23(b). Thus,

> A **supermesh** results when two meshes have a (dependent or independent) current source in common.

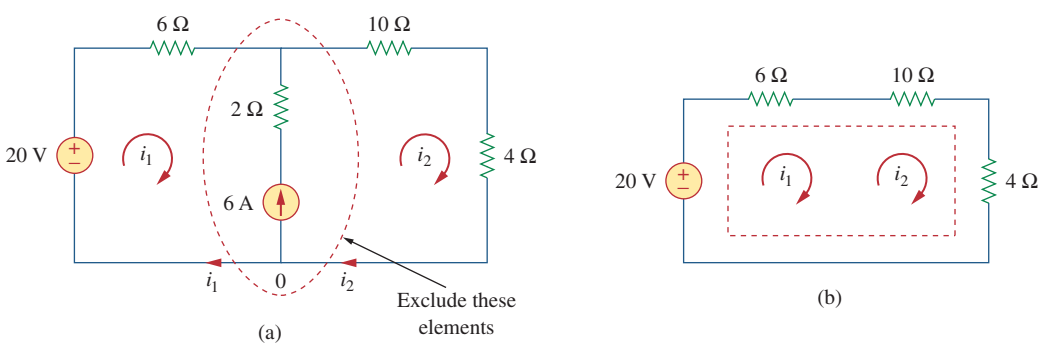

Figure 3.23
(a) Two meshes having a current source in common, (b) a supermesh, created by excluding the current source.

As shown in Fig. 3.23(b), we create a supermesh as the periphery of the two meshes and treat it differently. (If a circuit has two or more supermeshes that intersect, they should be combined to form a larger supermesh.) Why treat the supermesh differently? Because mesh analysis applies KVL—which requires that we know the voltage across each branch—and we do not know the voltage across a current source in advance. However, a supermesh must satisfy KVL like any other mesh. Therefore, applying KVL to the supermesh in Fig. 3.23(b) gives

$$-20 + 6i_1 + 10i_2 + 4i_2 = 0$$

or

$$6i_1 + 14i_2 = 20 \tag{3.18}$$

We apply KCL to a node in the branch where the two meshes intersect. Applying KCL to node 0 in Fig. 3.23(a) gives

$$i_2 = i_1 + 6 \tag{3.19}$$

Solving Eqs. (3.18) and (3.19), we get

$$i_1 = -3.2 \text{ A}, \qquad i_2 = 2.8 \text{ A} \tag{3.20}$$

Note the following properties of a supermesh:

1. The current source in the supermesh provides the constraint equation necessary to solve for the mesh currents.
2. A supermesh has no current of its own.
3. A supermesh requires the application of both KVL and KCL.

Example 3.7

For the circuit in Fig. 3.24, find i_1 to i_4 using mesh analysis.

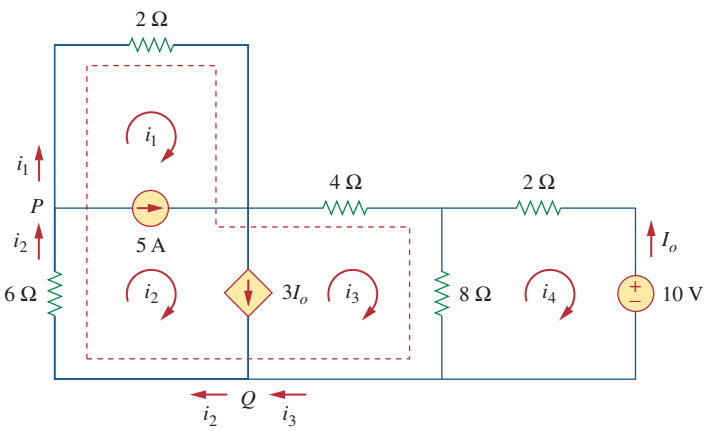

Figure 3.24
For Example 3.7.

Solution:

Note that meshes 1 and 2 form a supermesh since they have an independent current source in common. Also, meshes 2 and 3 form another supermesh because they have a dependent current source in common. The two supermeshes intersect and form a larger supermesh as shown. Applying KVL to the larger supermesh,

$$2i_1 + 4i_3 + 8(i_3 - i_4) + 6i_2 = 0$$

or

$$i_1 + 3i_2 + 6i_3 - 4i_4 = 0 \tag{3.7.1}$$

For the independent current source, we apply KCL to node P:

$$i_2 = i_1 + 5 \tag{3.7.2}$$

For the dependent current source, we apply KCL to node Q:

$$i_2 = i_3 + 3I_o$$

But $I_o = -i_4$, hence,

$$i_2 = i_3 - 3i_4 \tag{3.7.3}$$

Applying KVL in mesh 4,

$$2i_4 + 8(i_4 - i_3) + 10 = 0$$

or

$$5i_4 - 4i_3 = -5 \tag{3.7.4}$$

From Eqs. (3.7.1) to (3.7.4),

$$i_1 = -7.5 \text{ A}, \qquad i_2 = -2.5 \text{ A}, \qquad i_3 = 3.93 \text{ A}, \qquad i_4 = 2.143 \text{ A}$$

Practice Problem 3.7

Use mesh analysis to determine i_1, i_2, and i_3 in Fig. 3.25.

Answer: $i_1 = 4.632$ A, $i_2 = 631.6$ mA, $i_3 = 1.4736$ A.

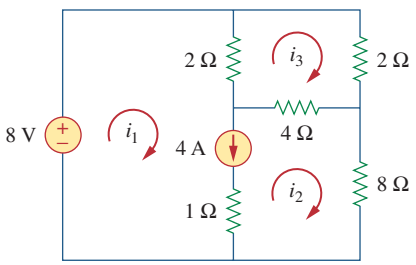

Figure 3.25
For Practice Prob. 3.7.

3.6 †Nodal and Mesh Analyses by Inspection

This section presents a generalized procedure for nodal or mesh analysis. It is a shortcut approach based on mere inspection of a circuit.

When all sources in a circuit are independent current sources, we do not need to apply KCL to each node to obtain the node-voltage equations as we did in Section 3.2. We can obtain the equations by mere inspection of the circuit. As an example, let us reexamine the circuit in Fig. 3.2, shown again in Fig. 3.26(a) for convenience. The circuit has two nonreference nodes and the node equations were derived in Section 3.2 as

$$\begin{bmatrix} G_1 + G_2 & -G_2 \\ -G_2 & G_2 + G_3 \end{bmatrix} \begin{bmatrix} v_1 \\ v_2 \end{bmatrix} = \begin{bmatrix} I_1 - I_2 \\ I_2 \end{bmatrix} \tag{3.21}$$

Observe that each of the diagonal terms is the sum of the conductances connected directly to node 1 or 2, while the off-diagonal terms are the negatives of the conductances connected between the nodes. Also, each term on the right-hand side of Eq. (3.21) is the algebraic sum of the currents entering the node.

In general, if a circuit with independent current sources has N nonreference nodes, the node-voltage equations can be written in terms of the conductances as

$$\begin{bmatrix} G_{11} & G_{12} & \dots & G_{1N} \\ G_{21} & G_{22} & \dots & G_{2N} \\ \vdots & \vdots & \vdots & \vdots \\ G_{N1} & G_{N2} & \dots & G_{NN} \end{bmatrix} \begin{bmatrix} v_1 \\ v_2 \\ \vdots \\ v_N \end{bmatrix} = \begin{bmatrix} i_1 \\ i_2 \\ \vdots \\ i_N \end{bmatrix} \tag{3.22}$$

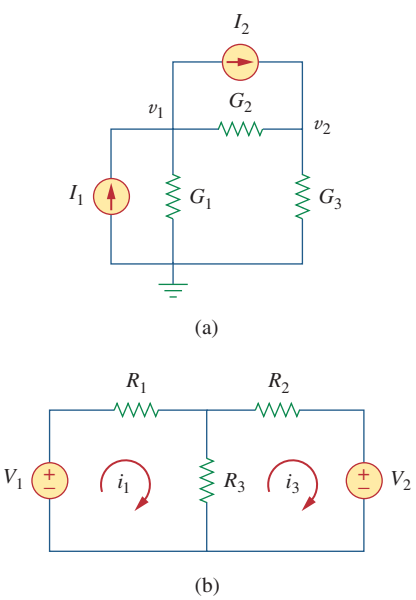

Figure 3.26
(a) The circuit in Fig. 3.2, (b) the circuit in Fig. 3.17.

or simply

$$\mathbf{Gv} = \mathbf{i} \tag{3.23}$$

where

G_{kk} = Sum of the conductances connected to node k

$G_{kj} = G_{jk}$ = Negative of the sum of the conductances directly connecting nodes k and j, $k \neq j$

v_k = Unknown voltage at node k

i_k = Sum of all independent current sources directly connected to node k, with currents entering the node treated as positive

G is called the *conductance matrix*; **v** is the output vector; and **i** is the input vector. Equation (3.22) can be solved to obtain the unknown node voltages. Keep in mind that this is valid for circuits with only independent current sources and linear resistors.

Similarly, we can obtain mesh-current equations by inspection when a linear resistive circuit has only independent voltage sources. Consider the circuit in Fig. 3.17, shown again in Fig. 3.26(b) for convenience. The circuit has two nonreference nodes and the node equations were derived in Section 3.4 as

$$\begin{bmatrix} R_1 + R_3 & -R_3 \\ -R_3 & R_2 + R_3 \end{bmatrix} \begin{bmatrix} i_1 \\ i_2 \end{bmatrix} = \begin{bmatrix} v_1 \\ -v_2 \end{bmatrix} \tag{3.24}$$

We notice that each of the diagonal terms is the sum of the resistances in the related mesh, while each of the off-diagonal terms is the negative of the resistance common to meshes 1 and 2. Each term on the right-hand side of Eq. (3.24) is the algebraic sum taken clockwise of all independent voltage sources in the related mesh.

In general, if the circuit has N meshes, the mesh-current equations can be expressed in terms of the resistances as

$$\begin{bmatrix} R_{11} & R_{12} & \dots & R_{1N} \\ R_{21} & R_{22} & \dots & R_{2N} \\ \vdots & \vdots & \vdots & \vdots \\ R_{N1} & R_{N2} & \dots & R_{NN} \end{bmatrix} \begin{bmatrix} i_1 \\ i_2 \\ \vdots \\ i_N \end{bmatrix} = \begin{bmatrix} v_1 \\ v_2 \\ \vdots \\ v_N \end{bmatrix} \tag{3.25}$$

or simply

$$\mathbf{Ri} = \mathbf{v} \tag{3.26}$$

where

R_{kk} = Sum of the resistances in mesh k

$R_{kj} = R_{jk}$ = Negative of the sum of the resistances in common with meshes k and j, $k \neq j$

i_k = Unknown mesh current for mesh k in the clockwise direction

v_k = Sum taken clockwise of all independent voltage sources in mesh k, with voltage rise treated as positive

R is called the *resistance matrix*; **i** is the output vector; and **v** is the input vector. We can solve Eq. (3.25) to obtain the unknown mesh currents.

Example 3.8

Write the node-voltage matrix equations for the circuit in Fig. 3.27 by inspection.

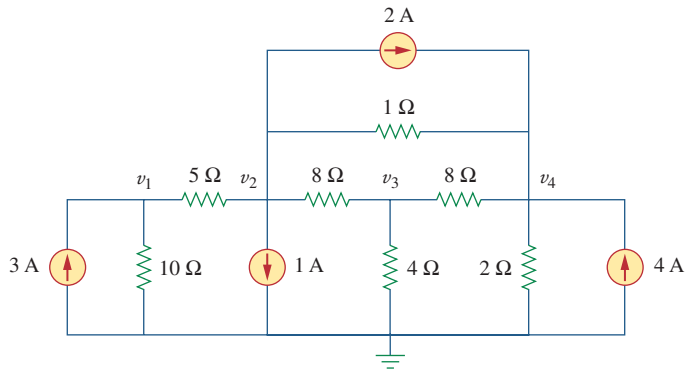

Figure 3.27
For Example 3.8.

Solution:

The circuit in Fig. 3.27 has four nonreference nodes, so we need four node equations. This implies that the size of the conductance matrix **G**, is 4 by 4. The diagonal terms of **G**, in siemens, are

$$G_{11} = \frac{1}{5} + \frac{1}{10} = 0.3, \qquad G_{22} = \frac{1}{5} + \frac{1}{8} + \frac{1}{1} = 1.325$$

$$G_{33} = \frac{1}{8} + \frac{1}{8} + \frac{1}{4} = 0.5, \qquad G_{44} = \frac{1}{8} + \frac{1}{2} + \frac{1}{1} = 1.625$$

The off-diagonal terms are

$$G_{12} = -\frac{1}{5} = -0.2, \qquad G_{13} = G_{14} = 0$$

$$G_{21} = -0.2, \qquad G_{23} = -\frac{1}{8} = -0.125, \qquad G_{24} = -\frac{1}{1} = -1$$

$$G_{31} = 0, \qquad G_{32} = -0.125, \qquad G_{34} = -\frac{1}{8} = -0.125$$

$$G_{41} = 0, \qquad G_{42} = -1, \qquad G_{43} = -0.125$$

The input current vector **i** has the following terms, in amperes:

$$i_1 = 3, \qquad i_2 = -1 - 2 = -3, \qquad i_3 = 0, \qquad i_4 = 2 + 4 = 6$$

Thus the node-voltage equations are

$$\begin{bmatrix} 0.3 & -0.2 & 0 & 0 \\ -0.2 & 1.325 & -0.125 & -1 \\ 0 & -0.125 & 0.5 & -0.125 \\ 0 & -1 & -0.125 & 1.625 \end{bmatrix} \begin{bmatrix} v_1 \\ v_2 \\ v_3 \\ v_4 \end{bmatrix} = \begin{bmatrix} 3 \\ -3 \\ 0 \\ 6 \end{bmatrix}$$

which can be solved using *MATLAB* to obtain the node voltages v_1, v_2, v_3, and v_4.

Practice Problem 3.8

By inspection, obtain the node-voltage equations for the circuit in Fig. 3.28.

Answer:

$$\begin{bmatrix} 1.25 & -0.2 & -1 & 0 \\ -0.2 & 0.2 & 0 & 0 \\ -1 & 0 & 1.25 & -0.25 \\ 0 & 0 & -0.25 & 1.25 \end{bmatrix} \begin{bmatrix} v_1 \\ v_2 \\ v_3 \\ v_4 \end{bmatrix} = \begin{bmatrix} 0 \\ 5 \\ -3 \\ 2 \end{bmatrix}$$

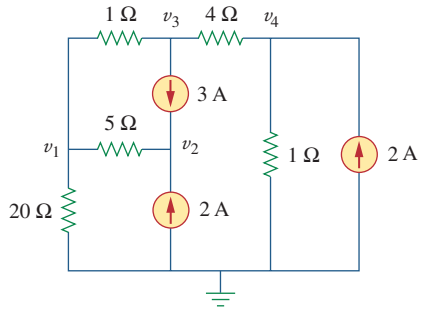

Figure 3.28
For Practice Prob. 3.8.

Example 3.9

By inspection, write the mesh-current equations for the circuit in Fig. 3.29.

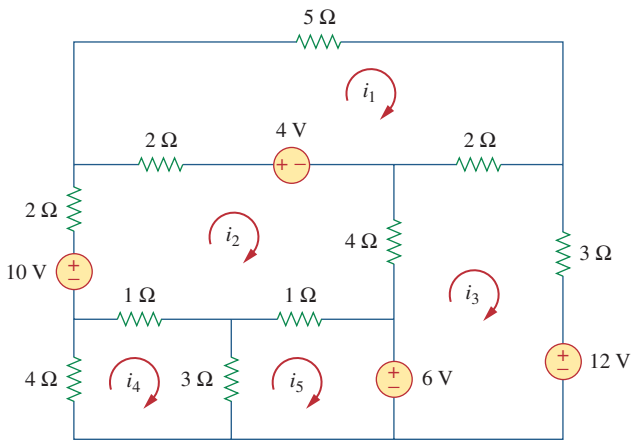

Figure 3.29
For Example 3.9.

Solution:

We have five meshes, so the resistance matrix is 5 by 5. The diagonal terms, in ohms, are:

$$R_{11} = 5 + 2 + 2 = 9, \qquad R_{22} = 2 + 4 + 1 + 1 + 2 = 10,$$
$$R_{33} = 2 + 3 + 4 = 9, \qquad R_{44} = 1 + 3 + 4 = 8, \qquad R_{55} = 1 + 3 = 4$$

The off-diagonal terms are:

$$R_{12} = -2, \qquad R_{13} = -2, \qquad R_{14} = 0 = R_{15},$$
$$R_{21} = -2, \qquad R_{23} = -4, \qquad R_{24} = -1, \qquad R_{25} = -1,$$
$$R_{31} = -2, \qquad R_{32} = -4, \qquad R_{34} = 0 = R_{35},$$
$$R_{41} = 0, \qquad R_{42} = -1, \qquad R_{43} = 0, \qquad R_{45} = -3,$$
$$R_{51} = 0, \qquad R_{52} = -1, \qquad R_{53} = 0, \qquad R_{54} = -3$$

The input voltage vector **v** has the following terms in volts:

$$v_1 = 4, \qquad v_2 = 10 - 4 = 6,$$
$$v_3 = -12 + 6 = -6, \qquad v_4 = 0, \qquad v_5 = -6$$

Thus, the mesh-current equations are:

$$\begin{bmatrix} 9 & -2 & -2 & 0 & 0 \\ -2 & 10 & -4 & -1 & -1 \\ -2 & -4 & 9 & 0 & 0 \\ 0 & -1 & 0 & 8 & -3 \\ 0 & -1 & 0 & -3 & 4 \end{bmatrix} \begin{bmatrix} i_1 \\ i_2 \\ i_3 \\ i_4 \\ i_5 \end{bmatrix} = \begin{bmatrix} 4 \\ 6 \\ -6 \\ 0 \\ -6 \end{bmatrix}$$

From this, we can use *MATLAB* to obtain mesh currents i_1, i_2, i_3, i_4, and i_5.

Practice Problem 3.9

By inspection, obtain the mesh-current equations for the circuit in Fig. 3.30.

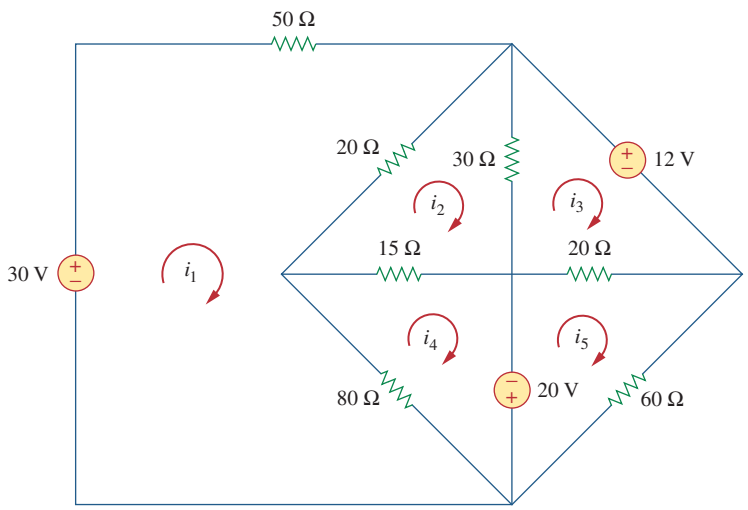

Figure 3.30
For Practice Prob. 3.9.

Answer:

$$\begin{bmatrix} 150 & -40 & 0 & -80 & 0 \\ -40 & 65 & -30 & -15 & 0 \\ 0 & -30 & 50 & 0 & -20 \\ -80 & -15 & 0 & 95 & 0 \\ 0 & 0 & -20 & 0 & 80 \end{bmatrix} \begin{bmatrix} i_1 \\ i_2 \\ i_3 \\ i_4 \\ i_5 \end{bmatrix} = \begin{bmatrix} 30 \\ 0 \\ -12 \\ 20 \\ -20 \end{bmatrix}$$

3.7 Nodal Versus Mesh Analysis

Both nodal and mesh analyses provide a systematic way of analyzing a complex network. Someone may ask: Given a network to be analyzed, how do we know which method is better or more efficient? The choice of the better method is dictated by two factors.

The first factor is the nature of the particular network. Networks that contain many series-connected elements, voltage sources, or supermeshes are more suitable for mesh analysis, whereas networks with parallel-connected elements, current sources, or supernodes are more suitable for nodal analysis. Also, a circuit with fewer nodes than meshes is better analyzed using nodal analysis, while a circuit with fewer meshes than nodes is better analyzed using mesh analysis. The key is to select the method that results in the smaller number of equations.

The second factor is the information required. If node voltages are required, it may be expedient to apply nodal analysis. If branch or mesh currents are required, it may be better to use mesh analysis.

It is helpful to be familiar with both methods of analysis, for at least two reasons. First, one method can be used to check the results from the other method, if possible. Second, since each method has its limitations, only one method may be suitable for a particular problem. For example, mesh analysis is the only method to use in analyzing transistor circuits, as we shall see in Section 3.9. But mesh analysis cannot easily be used to solve an op amp circuit, as we shall see in Chapter 5, because there is no direct way to obtain the voltage across the op amp itself. For nonplanar networks, nodal analysis is the only option, because mesh analysis only applies to planar networks. Also, nodal analysis is more amenable to solution by computer, as it is easy to program. This allows one to analyze complicated circuits that defy hand calculation. A computer software package based on nodal analysis is introduced next.

3.8 Circuit Analysis with *PSpice*

PSpice is a computer software circuit analysis program that we will gradually learn to use throughout the course of this text. This section illustrates how to use *PSpice for Windows* to analyze the dc circuits we have studied so far.

Appendix D provides a tutorial on using *PSpice for Windows*.

The reader is expected to review Sections D.1 through D.3 of Appendix D before proceeding in this section. It should be noted that *PSpice* is only helpful in determining branch voltages and currents when the numerical values of all the circuit components are known.

Example 3.10

Use *PSpice* to find the node voltages in the circuit of Fig. 3.31.

Solution:

The first step is to draw the given circuit using Schematics. If one follows the instructions given in Appendix sections D.2 and D.3, the schematic in Fig. 3.32 is produced. Since this is a dc analysis, we use voltage source VDC and current source IDC. The pseudocomponent VIEWPOINTS are added to display the required node voltages. Once the circuit is drawn and saved as *exam310.sch*, we run *PSpice* by selecting **Analysis/Simulate**. The circuit is simulated and the results

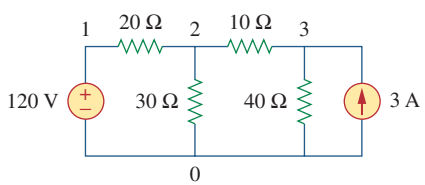

Figure 3.31
For Example 3.10.